BCI

LINGO SHELVING SYSTEM

01.01.2025

LINGO SHELVING

You will find exceptional versatility with the functional and flexible Lingo Shelving System. It encapsulates the true meaning of flexibility. Its modular construction provides the highest degree of functionality and versatility and its style and quality makes it suitable for both contemporary and classic library environments.

The Lingo shelving system offers endless possibilities of function and design. The construction of the shelving system, with 25 mm increments, allows for easy assembly and adjustment without the use of specific tools.

Lingo is available as a single- or double-sided shelving, with or without castors, and as a straight, curved or combined solution. It can be fitted with steel or wooden shelves, as well as a wide variety of other functional components. The result – a customisable shelving systems that fits the requirements of your specific library.

Moreover, the basic Lingo shelving configurations are GS-approved by TüV in accordance with the DIN EN 16121/12.17 standard as regards to safety, strength, durability and stability. See under Technical Specifications for further information on installation.

You will find all the standard products in this overview. For additional inspiration we invite you to visit our website where you can find project inspiration from our latest projects around the world. Our professional sales team is ready to help you with any questions you may have.

BCI

INDEX

FSC ® ... 6
EU ECOLABEL ... 7
DESIGN OPTIONS ... 8
TECHNICAL SPECIFICATIONS ... 10
DIMENSIONS ... 20
BAY CONSTRUCTION ... 24
STRAIGHT AND ROUND COMBINATIONS ... 26

STRAIGHT CONFIGURATIONS

WITH ADJUSTABLE FEET, FOR TOP SHELF
F14000-F14005 & F14012-F14017
Single-sided configurations with back frame ... 30
Double-sided configurations with back frame ... 32

Single-sided configurations with high wooden back panel ... 36
Double-sided configurations with high wooden back panel ... 38

Single-sided configurations with low wooden back panel ... 42
Double-sided configurations with low wooden back panel ... 44

Single-sided configurations with cross brace ... 48
Double-sided configurations with cross brace ... 50

WITH ADJUSTABLE FEET & TOP PLATE
F14100-F14105 & F14112-F14117
Single-sided configurations with back frame ... 54
Double-sided configurations with back frame ... 56

Single-sided configurations with wooden back panel ... 60
Double-sided configurations with wooden back panel ... 62

Single-sided configurations with cross brace ... 66
Double-sided configurations with cross brace ... 68

WITH CASTOR PLATE, FOR TOP SHELF
F14200-14202
Double-sided configurations with back frame ... 72
Double-sided configurations with wooden high back panel ... 78
Double-sided configurations with wooden low back panel ... 84
Double-sided configurations with cross brace ... 90

WITH CASTOR PLATE, FOR TOP PLATE
F14300-F14302
Double-sided configurations with back frame ... 96
Double-sided configurations with wooden back panel ... 102
Double-sided configurations with cross brace ... 108

LINGO SQUARE
With plint ... 112
With castors ... 114

COMPONENTS FOR STRAIGHT SHELVING

SHELVES
ST1, ST2, ST4 - steel top shelves ... 116
WT1, WT2, WT3 - wooden top shelves ... 128
WO1 - wooden overlaying top plates ... 131

SI1, SI2, SI3, SI4 - steel intermediate shelves ... 138
WI1, WI2, WI3, WI4 - wooden intermediate shelves ... 150

SB1, SB2, SB3, SB4 - steel bottom shelves ... 156
WB1, WB2, WB3, WB4 - wooden intermediate shelves ... 164

Display shelves ... 168

ACCESSORIES
Steel browsers ... 170
Display and storage ... 176
Book supports ... 180
Signage for front of shelf ... 182
Signage for end panel ... 184

CASTORS & PLINTHS
Visible castors ... 187
Hidden castors ... 187
Castor plates ... 189
Plinths ... 189

PANELS
With adjustable feet/for castor frame:
Single-sided wooden panels - for top shelf ... 190
Double-sided wooden panels - for top shelf ... 192
Double-sided slat wooden panels - for top shelf ... 193

Single-sided wooden panels - for overlaying top plate ... 194
Double-sided wooden panels - for overlaying top plate ... 196
Double-sided slat wooden panels - for overlaying top plate ... 197

For castor plate:
Double-sided wooden panels - for top shelf ... 198
Double-sided slat wooden panels - for top shelf ... 199

Double-sided wooden panels - for overlaying top plate ... 201
Double-sided slat wooden panels - for overlaying top plate ... 201

End panel bay
End panel bay ... 202
Components for end panel bay ... 203

CONNECTION ELEMENTS
Wooden back panels ... 204
Steel frame ... 206
Cross frame ... 206

LIGHTING
Book Big lighting ... 208

INDEX

ROUND CONFIGURATIONS

26° WITH ADJUSTABLE FEET, FOR TOP SHELF
F14500-502 & F14506-508
26° - back frame 210
26° - high steel back panel 212
26° - low steel back panel 214

26° WITH ADJUSTABLE FEET & TOP PLATE
F14600-605
26° - back frame 216
26° - steel back panel 218

26° WITH CASTOR PLATE, FOR TOP SHELF
F14800-802
26° - back frame 220
26° - high steel back panel 222
26° - low steel back panel 224

26° WITH CASTOR PLATE & TOP PLATE
F14900-902
26° - back frame 226
26° - steel back panel 228

18° WITH ADJUSTABLE FEET, FOR TOP SHELF
F14512-514 & F14518-520
18° - back frame 230
18° - high steel back panel 232
18° - low steel back panel 234

18° WITH ADJUSTABLE FEET & TOP PLATE
F14612-617
18° - back frame 236
18° - steel back panel 238

18° WITH CASTOR PLATE, FOR TOP SHELF
F14806-808
18° - back frame 240
18° - high steel back panel 242
18° - low steel back panel 244

18° WITH CASTOR PLATE & TOP PLATE
F14906-908
18° - back frame 246
18° - steel back panel 248

COMPONENTS FOR ROUND SHELVING

SHELVES
WT5, WT7 - wooden top shelves 251
WO5 - wooden overlaying top plates 255

SI5, SI6 - steel intermediate shelves 259
WI5, WI6, WI7, WI8 - wooden intermediate shelves 264

SB5, SB6 - steel bottom shelves 271
WB5, WB6, WB7, WB8 - wooden bottom shelves 276

CASTORS & PLINTHS
Visible castors 283
Hidden castors 283
Castor plates 284
Plinths 285

PANELS
With adjustable feet/for castor frame:
Double-sided wooden panels - for top shelf 286
Double-sided wooden panels - for overlaying top plate 288

For castor plate:
Double-sided wooden panels - for top shelf 290
Double-sided wooden panels - for overlaying top plate 292

End panel bay
End panel bay and components 294

CONNECTION ELEMENTS
Steel back panels 296
Steel frames 298

EU Eco-labelled products
FSC-certified products
Demountable products

FSC

WOOD FROM SUSTAINABLE MANAGED FORESTRY

We are committed to increasing the share of sustainable raw wooden material in our products and thereby support responsibly managed forests – for a better world.

Governments and local authorities are specifying the supply of legal and responsibly sourced wood in their procurement policies.

We have invested in a Chain-of-Custody Multi-site certificate (FSC-C144988), issued by FSC, which documents, that we can offer wood from responsibly managed forests. FSC (Forest Stewardship Council ®) is an international labelling scheme, that documents that FSC labelled products originate from sustainable forestry.

Working with certified suppliers, we can now offer painted and veneered wooden components as fully FSC Mix certified (noted in this document for each wooden product, which is FSC-certified. We are continuously working on increasing the number of certified products in our portfolio. To stay informed about our environmental certifications, we recommend visiting our website regularly to access the most recent information.

What is sustainable managed forestry?
According to the FSC, forests, managed according to their principles and criteria, mean fair conditions for workers, respect for indigenous communities and local populations as well as strict environmental controls.

The FSC label ensures that the trees that are harvested are replaced or allowed to regenerate naturally.

The FSC label also ensures that all the wood is tracked from the forest to the store. Every link between the forest and the consumer is certified to make it clearly identifiable which wood is from sustainable forestry and which is not.

Source: Forest Stewardship Council
http://www.fsc-uk.org/en-uk

EU ECOLABEL

EU-ECOLABELLED FURNITURE

We are pleased to add the EU Ecolabel to our preferred eco labels. The EU Ecolabel certification reflects our unwavering commitment to providing our customers with documented environmentally friendly choices.

The EU Ecolabel is an official label that complies with European legislation on sustainable actions. We present a selection of EU-ecolabelled library furniture, facilitating the choice of more sustainable and responsible solutions. The requirements are based on a life-cycle assessment of the product and requirements are imposed on production, use and disposal.

The purpose of the EU Ecolabel is to reduce the overall environmental impact from production and consumption. Therefore, the environmental label considers the entire journey of the product and the environmental issues that arise along the way.

Working with certified suppliers, we can now offer the majority of our steel and wooden components as EU Ecolabelled. We are continuously working on increasing the number of certified products in our portfolio. To stay informed about our environmental certifications, we recommend visiting our website regularly to access the most recent information.

Why choose the EU Ecolabel?
An increasing number of businesses and individuals are conscious of the environmental footprint they leave when designing a library.

By choosing EU Ecolabel certifed products, you do not only contribute to sustainability and environmental conservation but are also assured of meeting stringent eco-friendly standards.

The EU Ecolabel ensures:
- Rigorous conditions for environmentally harmful substances.
- Specific criteria for each product type to increase the label's business relevance.
- Stringent requirements for health-hazardous substances.
- Third-party approval, ensuring the credibility of the labelling.

DESIGN OPTIONS

STEEL COMPONENTS - PAINTED

A PRICE GROUP - BASIS PRICE (smooth finish)

03
Traffic white
RAL 9016
Gloss 75-90

02
Oyster white
RAL 1013
Gloss 40-50

22
Moss green
RAL 6005
Gloss 71-85

26
Fir green
RAL 6009
Gloss 71-85

12
Steel blue
RAL 5011
Gloss 71-85

13
Light grey
RAL 7035
Gloss 71-85

15
Dusty grey
RAL 7037
Gloss 71-85

16
Traffic grey
RAL 7043
Gloss 71-85

17
Basalt grey
RAL 7012
Gloss 71-85

18
Slate grey
RAL 7015
Gloss 71-85

19
Anthracite grey
RAL 7016
Gloss 71-85

25
Jet black
RAL 9005
Gloss 71-85

B PRICE GROUP - BASIS PRICE WITH 7% SURCHARGE (smooth finish)

01
Pure white
RAL 9010
Gloss 71-85

04
Traffic yellow
RAL 1023
Gloss 71-85

05
Sun yellow
RAL 1037
Gloss 71-85

06
Signal orange
RAL 2010
Gloss 71-85

07
Pearl orange
RAL 2013
Gloss 65-85

08
Flame red
RAL 3000
Gloss 71-85

09
Ruby red
RAL 3003
Gloss 71-85

21
Reseda green
RAL 6011
Gloss 71-85

10
Pigeon blue
RAL 5014
Gloss 71-85

11
Ocean blue
RAL 5020
Gloss 71-85

14
White aluminium
RAL 9006
Gloss 50-70

31
Grey aluminium
RAL 9007
Gloss 50-70

B PRICE GROUP - BASIS PRICE WITH 7% SURCHARGE (textured finish)

27
Pure white
RAL 9010

29
Concertina grey

28
Grey aluminium
RAL 9007

23
Anthracite grey
RAL 7016

24
Graphite black
RAL 9011

Note:

- All displayed standard colours and material are EU Ecolabel certified – but only when used on products marked as EU Ecolabel certified in the price list. If you wish to use other colours, we cannot guarantee they are available, and checking the options may take extra time.
- Other RAL/NCS colours have a starter fee of GBP 215 / EUR 250 and a surcharge of 15%. A higher surcharge for colours with "metallic" look or different surface textures must be expected.
- See specific colour for steel gloss specification. Special requests outside specified gloss range are not covered by the above surcharges.
- Chrome, electro galvanised and aluminium parts are not available in other colours.
- Products such as e.g. castors and accurides cannot be produced in other colours than described in the price list.

DESIGN OPTIONS

WOODEN COMPONENTS - MELAMINE/LAMINAT

A PRICE GROUP - BASIS PRICE

61
Signal white
RAL 9003

72
Oyster white
Similar to RAL 1013

62
Pure white
Similar to RAL 9010

63
Steel blue
RAL 5011

71
Dusty grey
Similar to RAL 7037

16
Basalt grey
Similar to RAL 7012

19
Slate grey
Similar to RAL 7015 and RAL 7016

04
Beech decor

05
Maple decor

06
Cherry decor

07
Oak decor

08
Olive decor

09
Birch decor

C PRICE GROUP - BASIS PRICE WITH 10% SURCHARGE

64
Signal yellow
RAL 1003

65
Yellow orange
RAL 2000

66
Pure orange
RAL 2004

67
Traffic red
RAL 3020

02
Ruby red
Similar to RAL 3003

13
Lime green
Similar to NCS S1060-G40Y

68
Reseda green
Similar to RAL 6011

14
Crystal blue
Similar to NCS S1020-R90B

73
Pigeon blue
RAL 5014

74
Ocean blue
Similar to RAL 5020

69
Light grey
Similar to RAL 7035

70
White aluminium
Similar to RAL 9006

75
Jet black
Similar to RAL 9005

Note:

- All displayed standard colours and material are EU Ecolabel certified – but only when used on products marked as EU Ecolabel certified in the price list. If you wish to use other colours, we cannot guarantee they are available, and checking the options may take extra time.
- The above selection of colours are shown for both melamine and laminat.
- WI3/WB3/WI4/WB4 shelves in L1000 mm will be delivered in laminat.

DESIGN OPTIONS

WOODEN COMPONENTS - PAINTED

A PRICE GROUP - BASIS PRICE

01
Pure white
RAL 9010
Gloss 20-30

02
Oyster white
RAL 1013
Gloss 20-30

03
Traffic white
RAL 9016
Gloss 20-30

04
Traffic yellow
RAL 1023
Gloss 20-30

05
Sun yellow
RAL 1037
Gloss 20-30

06
Signal orange
RAL 2010
Gloss 20-30

07
Pearl orange
RAL 2013
Gloss 20-30

08
Flame red
RAL 3000
Gloss 20-30

09
Ruby red
RAL 3003
Gloss 20-30

21
Reseda green
RAL 6011
Gloss 20-30

22
Moss green
RAL 6005
Gloss 20-30

26
Fir green
RAL 6009
Gloss 20-30

10
Pigeon blue
RAL 5014
Gloss 20-30

11
Ocean blue
RAL 5020
Gloss 20-30

12
Steel blue
RAL 5011
Gloss 20-30

13
Light grey
RAL 7035
Gloss 20-30

14
White aluminium
RAL 9006
Gloss 20-30

31
Grey aluminium
RAL 9007
Gloss 20-30

15
Dusty grey
RAL 7037
Gloss 20-30

16
Traffic grey
RAL 7043
Gloss 20-30

17
Basalt grey
RAL 7012
Gloss 20-30

18
Slate grey
RAL 7015
Gloss 20-30

19
Anthracite grey
RAL 7016
Gloss 20-30

25
Jet black
RAL 9005
Gloss 20-30

Any RAL/NCS colour
Gloss 20-30

Note:

- All displayed standard colours and material are EU Ecolabel certified – but only when used on products marked as EU Ecolabel certified in the price list. If you wish to use other colours, we cannot guarantee they are available, and checking the options may take extra time.
- The above selection of colours match our steel colours. Note that you can order any RAL/NCS colour without surcharge.
- A surcharge for colours with "metallic" look or different surface textures must be expected, please contact Customer Service.

A PRICE GROUP - BASIS PRICE

01
Light steamed beech

10
Oak

20
Maple

30
Ash

40
Birch

Note:

- All displayed standard colours and material are EU Ecolabel certified – but only when used on products marked as EU Ecolabel certified in the price list. If you wish to use other colours, we cannot guarantee they are available, and checking the options may take extra time.
- The wooden veneers can also be stained for a surcharge, please contact Customer Service. Samples will be forwarded for approval.

TECHNICAL SPECIFICATIONS

GENERAL SPECIFICATIONS

DIMENSIONS
Dimensions of complete bays in available modules and heights can be found in each catalogue section which include complete configurations. Dimensions of each component can be found under the individual products. All cited measurements are nominal sizes.

MAXIMUM LOAD
The shelving is only intended for use on a flat, even floor without gradient. Before loading the shelving, make sure that the floor is suitable for the weight of the shelving and the stored goods.

The maximum values specified below must be observed.

Maximum area load for Lingo single-sided bay: 480 kg
Maximum area load for Lingo double-sided bay: 960 kg
Maximum area load for Lingo double-sided bay on castor frame with visible/hidden castors: 400 kg
Maximum area load for Lingo double-sided bay on castor plate: 400 kg
Maximum area load for Lingo Square: 600 kg

ST1 - Steel top shelf: 25 kg
ST2 - Steel top shelf: 80 kg
ST4 - Steel top shelf: 80 kg

WT1 - Wooden top shelf: 25 kg
WT2 - Wooden top shelf: 25 kg
WT3 - Wooden top shelf: 25 kg
WT5 - 26°/18° inner/outer wooden top shelf: 25 kg
WT7 - 26°/18° inner/outer wooden top shelf: 25 kg

WO1 - Wooden overlaying top plate: 25 kg
WO5 - 26°/18° wooden overlaying top plate: 25 kg

SI1/SB1 - Steel shelf with H47 mm steel backedge: 80 kg
SI2/SB2 - Steel shelf with H17 mm acrylic backedge: 80 kg
SI3/SB3 - Steel shelf with H25 mm steel backedge: 80 kg
SI4/SB4 - Steel shelf: 80 kg
SI5/SB5 - 26°/18° inner/outer steel shelf with H47 mm steel backedge: 80 kg
SI6/SB6 - 26°/18° inner/outer steel shelf: 80 kg

WI1/WB1 - Wooden shelf with H47 mm steel backedge: 80 kg
WI2/WB2 - Wooden shelf: 80 kg
WI3/WB3 - Wooden shelf with H47 mm steel backedge: 60 kg
WI4/WB4 - Wooden shelf: 60 kg
WI5/WB5 - 26°/18° inner/outer wooden shelf with H47 mm steel backedge: 80 kg
WI6/WB6 - 26°/18° inner/outer wooden shelf: 80 kg
WI7/WB7 - 26°/18° inner/outer wooden shelf with H47 mm steel backedge: 60 kg
WI8/WB8 - 26°/18° inner/outer wooden shelf: 60 kg

Steel browser with pull-out frame: 40 kg

BAYS WITH ADJUSTABLE FEET AND TOP SHELVES
They are available as starter and add-on bays.

BAYS WITH ADJUSTABLE FEET AND OVERLAYING TOP PLATES
They are availabe as starter and add-on bays. You can combine 18°, 26° and straight bays to create the desired complete shelving. The adjustable feet can be adjusted even when the bays are loaded.

BAYS WITH CASTORS
Castors may only be fitted with double-sided bays which do not exceed a maximum height of 1520 mm and a maximum of 3 adjoining bays. Bays on castors are not to be used for transportation. The castors are only fitted in order to move the shelving system around, see instruction below. Crossing doorsteps can be dangerous. After moving the shelving you must lock the brakes. Shelving systems generally have to be moved and placed on a flat, level and horizontal floor.

There is a risk of getting hurt if the shelving system is moved incorrectly. Therefore, the following rules of conduct must be followed:

- It must be ensured that no items can fall of the shelves while moving. If in doubt, then remove items before moving.
- Use a maximum of two people to move the shelving system.
- Make sure to move the shelving system in a smooth movement, avoid jerky movements.
- Only move the shelving system at the ends, do not stand at the long sides of the shelving system during the move.
- To avoid injuries, you must ensure that you always have enough space to the surrounding walls and other furniture.
- If more than one person is involved, be sure to coordinate direction and intention, before actually moving the shelving system.
- Ensure that you only move the shelving system on a flat, level floor with no incline. The floor must be free of any items. Even small parts may cause a sudden blockage of a castor. In this case, the shelving system could tip or damage the floor.
- Before moving, unlock the wheel brakes.
- After moving, lock the wheel brakes.

WEIGHT ON BAYS WITH CASTORS
Visible castors on castor frame are available with and without brakes. We recommend installing at least 2 castors with brakes for one or more adjoining bays. Max. load of 100 kg per visible castor/400 kg per bay.

Hidden castors on castor frame are delivered without brakes, so when shelving is positioned in place, you must adjust the adjustable feet. Max. load of 100 kg per hidden castor/400 kg per bay.

Bays with castor plates are mounted with either 4, 6 or 8 castors, 2 of which are with brakes. Max. load of 400 kg per bay.

BAYS WITH SHELVES
Bays with back panel/back frame: Each bay must have at least 2 shelves (4 shelves for double-sided bays) - top and bottom - screwed into the panels for stability. The remaining shelves can be inserted without screws.

Bays with cross brace: Each bay above H920 mm must have at least 3 shelves (6 shelves for double-sided bays) - top, middle and bottom - screwed into the panels for stability.

STABILITY
End panels are provided with adjustable feet, except for panels intended for use with castor plates. Single-sided panels are supplied with wall securement and must be fixed to the wall.

ROUNDED EDGES
All storage units and brackets have rounded edges.

DENSITY
Chip board has a density of 600-700 kg/m3
Block board has a density of 602 kg/m3 (+/- 2 %)
MDF has a density of 700 kg/m3 (+/- 5-7 %)

TECHNICAL SPECIFICATIONS

GENERAL SPECIFICATIONS

BROWSERS
Shelvings can be fitted with browsers. Pulling out one or more browsers could cause the shelving to tip. Ensure that the shelving cannot tip by securing shelving. If in doubt, you must fix the shelving to the floor, wall or ceiling.

For safety reasons:
- It is not allowed to load browsers with more than 45 kg.
- Do not use the browsers as a step. The lowest browser must be installed at least 50 cm above the ground. This should ensure that the browser is not used as a step.
- Single-sided bays must be fixed to the wall. A maximum of 3 drawers per bay is allowed.
- Only 1 browser per side and bay is allowed on double-sided bays.
- Do not install pull-out browsers on shelving with castors.

ASSEMBLY
All wooden shelving units come knocked-down. Assembly guidelines can be found on our website.

STEEL COMPONENTS

are powder coated with standard polyester based powders that secures high UV resistance. Powders comply with EN 45545 (fire protection - similar to DIN 4201). Thickness of the coating is 60-80 my.

The powder used includes:
- no azo dyes that can release a leaving carcinogenic amine component
- no triglycidylisocyanurate (TGIC)
- no heavy steel-containing pigments such as lead and cadmium
- no volatiles

Antibacterial equipping of surfaces upon request.

BACK FRAMES
are made of 30 x 20 x 1.5 mm steel tubes. The back frame is easy to assemble between the panels.

CROSS BRACES
are made of galvanized steel Ø4 mm.

BACK PANELS
are made of 0,9 mm steel.

SHELVES AND BROWSERS
are made of 0.9 mm sheet steel. The steel shelves have a H25 mm frontedge, the steel top shelves have a H25/47 mm frontedge.

BRACKETS
are made of 1.4 mm sheet steel.

FRAMES FOR CASTORS
are made of:
visible castors: 40 x 30 x 2 steel tubes. The end plates are made of 2 mm sheet steel.
hidden castors: 30 x 30 x 2. steel tubes. The end plates are made of 2 mm sheet steel, the plinth is made of 0,9 mm sheet steel.

STRAIGHT PLINTHS
are made of 1,4 mm steel.

ROUND PLINTHS
are made of 0,9 mm steel.

WOODEN MELAMINE COMPONENTS
are made of chipboard (melamine)/blockboard (laminate).

PANELS
are made of 25 mm chipboard with a 2 mm ABS border. The panels have two holes in the bottom for adjustable feet except from double-sided intermediate panels above 1220 mm, they have 4 holes for adjustable feet.

END PANELS FOR LINGO SQUARE
are made of 25 mm chipboard with a 2 mm ABS border.

BACK PANELS
are made of 19 mm chipboard with a 2 mm ABS border on the horizontal edges.

SHELVES
WT1/WT2/WT3 and WT5/WT7 are made of 25 mm chipboard with a 2 mm ABS border.

WO1 and WO5 are made of 25 mm chipboard with a 2 mm ABS border.

WI3/WB3 and WI4/WB4 (modules 500/750/900) are made of 25 mm chipboard with a 2 mm ABS border.
WI3/WB3 and WI4/WB4 (module 1000) are made of 25 mm block board and has a laminate finish, except for colour D62, which has a melamin finish.
WI7/WB7 and WI8/WB8 are made of 25 mm chipboard.

CASTOR PLATES
are made of 25 mm chipboard with a 2 mm ABS border.

PLINTHS
are made of 25 mm chipboard with a 2 mm ABS border on the horizontal edges.

WOODEN PAINTED COMPONENTS

are made of either MFC/MDF/blockboard, which are painted with acid lacquer. Standard components have gloss 20 - 30. See Design Options for colour specifications.

PANELS
are made of 25 mm MFC, with a 2 mm paintable ABS border. The panels have two holes in the bottom for adjustable feet, double-sided intermediate panels above 1220 mm have 4 holes for adjustable feet.

DISPLAY END PANELS
are made of 25 mm MDF with a 2 mm paintable ABS border. The panels have two holes in the bottom for adjustable feet.

END PANELS FOR LINGO SQUARE
are made of 25 mm MFC.

BACK PANELS
are made of 19 mm MFC with a 2 mm paintable ABS border on the horizontal edges.

SHELVES
WT1/WT2/WT3 and WT5/WT7 are made of 25 mm MFC, with a 2 mm paintable ABS border.

WO1 and WO5 are made of 25 mm MFC, with a 2 mm paintable ABS border.

WI1/WB1 and WI2/WB2 are made of 25 mm blockboard.

WI5/WB5 and WI6/WB6 are made of 25 mm blockboard.

CASTOR PLATES
are made of 25 mm MFC with a 2 mm paintable ABS border.

PLINTHS
are made of 25 mm MFC with a 2 mm paintable ABS border on the horizontal edges.

WOODEN VENEERED COMPONENTS

are mainly lacquered with a environmental-friendly UV transparent lacquered veneer finish.

PANELS
are made of 25 mm chipboard and are veneered with 0.6 mm veneer. All edges on the panels have a 2 mm veneer edge. The panels have two holes in the bottom for adjustable feet except from double-sided intermediate panels above 1220 mm, they have 4 holes for adjustable feet.

DISPLAY END PANELS
are made of 25 mm MDF and are veneered with 0.6 mm veneer. All edges have a 2 mm veneer edge. The panels have two holes in the bottom for adjustable feet.

END PANELS FOR LINGO SQUARE
are made of 25 mm chipboard and are veneered with 0.6 mm veneer. All edges have a 2 mm veneer edge.

BACK PANELS
are made of 19 mm chipboard and are veneered with 0.6 mm veneer. The horizontal edges have a 2 mm veneer edge. The vertical edges are not banded, as they are not exposed after assembly of the back panel.

SHELVES
WI1/WB1 and WI2/WB2 are made of 25 mm block board and are veneered with 0.6 mm veneer. The front and back edges have a 2 mm veneer edge.
WI5/WB5 and WI6/WB6 are made of 25 mm block board and are veneered with 0.6 mm veneer. The front and back edges have a 2 mm veneer edge.

WT1/WT2/WT3 and WT5/WT7 are made of 25 mm chipboard and are veneered with 0.6 mm veneer. The front and back edges have a 2 mm veneer edge.

WO1 and WO5 are made of 25 mm chipboard and are veneered with 0.6 mm veneer. All edges on the panels have a 2 mm veneer edge.

CASTOR PLATES
are made of 25 mm chipboard and are veneered with 0.6 mm veneer. All edges on the castor plate have a 2 mm veneer edge.

PLINTHS
are made of 25 mm chipboard and are veneered with 0.6 mm veneer on the front. The top and bottom edge have a 2 mm veneer edge.

BCI

DIMENSIONS

LINGO SHELVING

The distance between the front edge of the end panel and the front edge of the shelf is 7 mm. The shelves are adjustable in 25 mm increments.

Lingo shelving configurations are delivered as standard based on price group A (melamine coated/painted/veneer), see p. 6-9 for Design Options.

HEIGHTS

Lingo shelving is available in 6 heights;
720, 920, 1220, 1520, 1820 and 2120 mm.
Heights shown below are for shelving with adjustable feet/castor frame/castor plate.

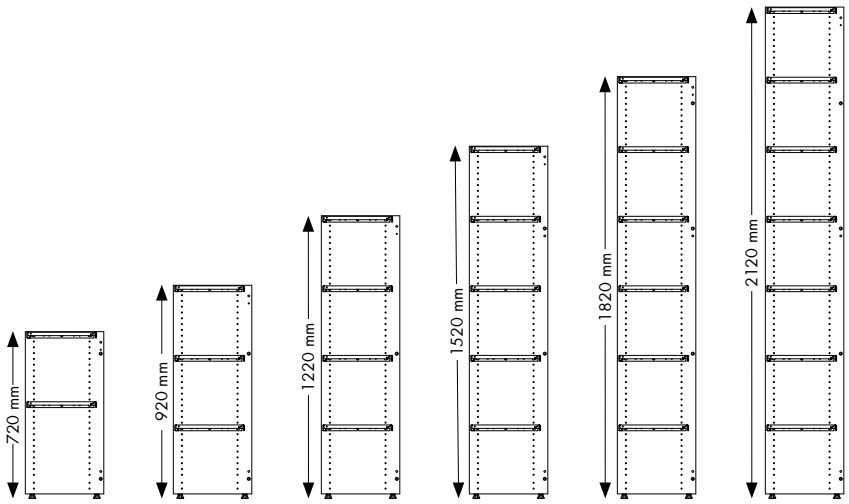

WIDTHS

Lingo shelving is available in 4 widths:
500, 750, 900 and 1000 mm.

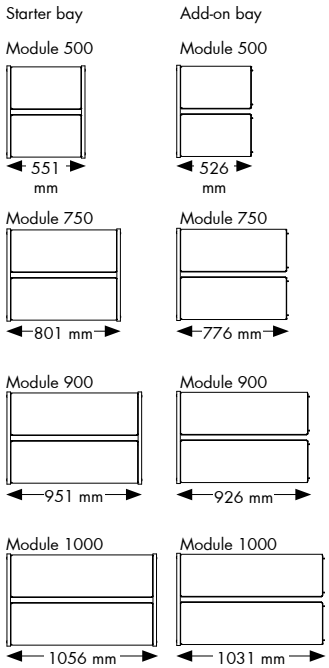

DEPTHS

Lingo shelving is available in 2 x 3 depths:
250, 300 and 400 mm
2 x 250, 2 x 300 and 2 x 400 mm

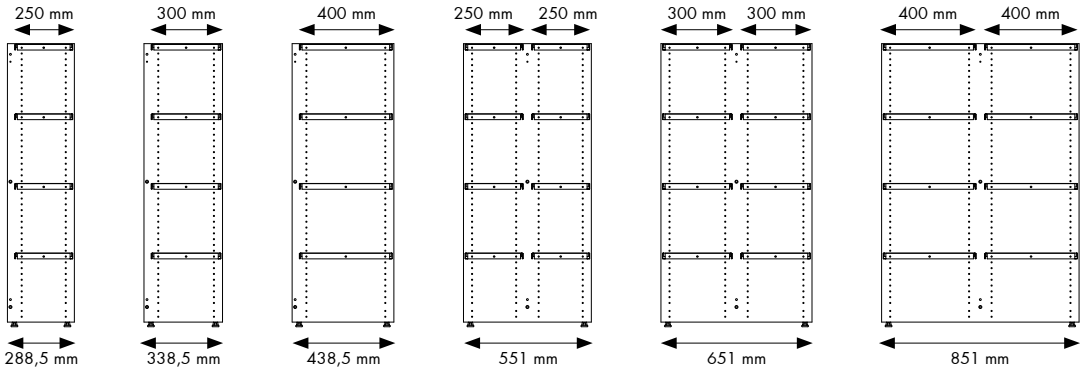

DIMENSIONS

LINGO SQUARE

The distance between the front edge of the end panel and the front edge of the shelf is 7 mm. The shelves are adjustable in 25 mm increments.

Lingo Square configurations are delivered as standard based on price group A (melamine coated/painted/veneer), see p. 6-9 for Design Options.

HEIGHTS

Lingo Square is available in 4 heights:
920,1220 1520 and 1820 mm.
Heights shown below are for shelving with adjustable feet/castors.

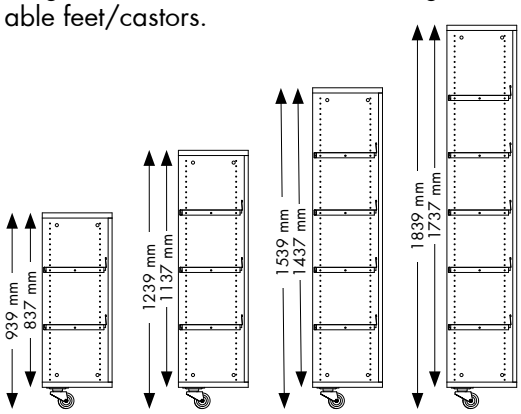

WIDTHS

Lingo Square is available in 3 widths;
500, 750 and 900 mm.

Module 500

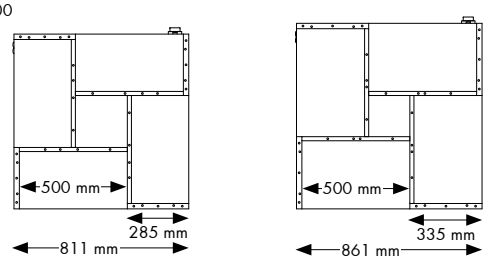

Module 750

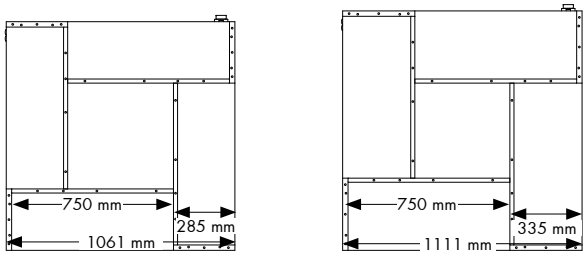

Module 900

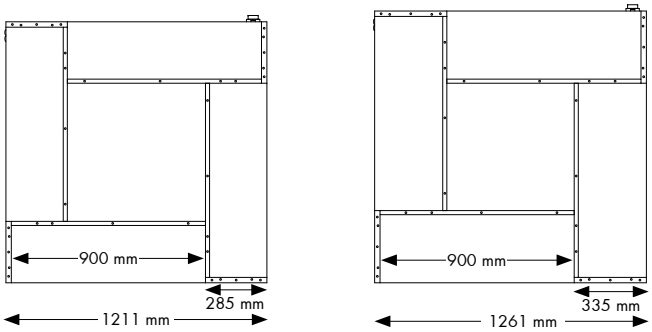

DEPTHS

Lingo Square is available in 2 depths;
250 and 300 mm

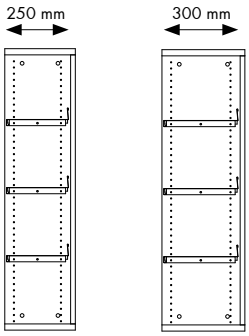

DIMENSIONS

LINGO ROUND SHELVING

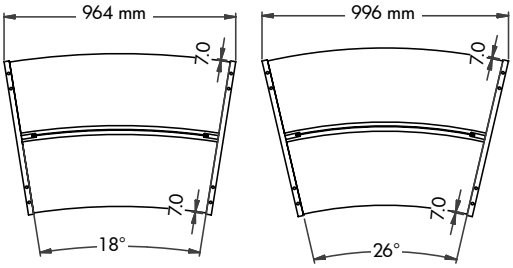

The distance between the front edge of the end panel and the front edge of the shelf is 7 mm. The shelves are adjustable in 25 mm increments.

Lingo Round configurations are delivered as standard based on price group A (melamine coated/painted/veneer), see p. 6-9 for Design Options.

HEIGHTS

Lingo Round shelving is available in 6 heights;
720, 920, 1220, 1520, 1820 and 2120 mm.
Heights shown below are for shelving with adjustable feet/castor frame/castor plate.

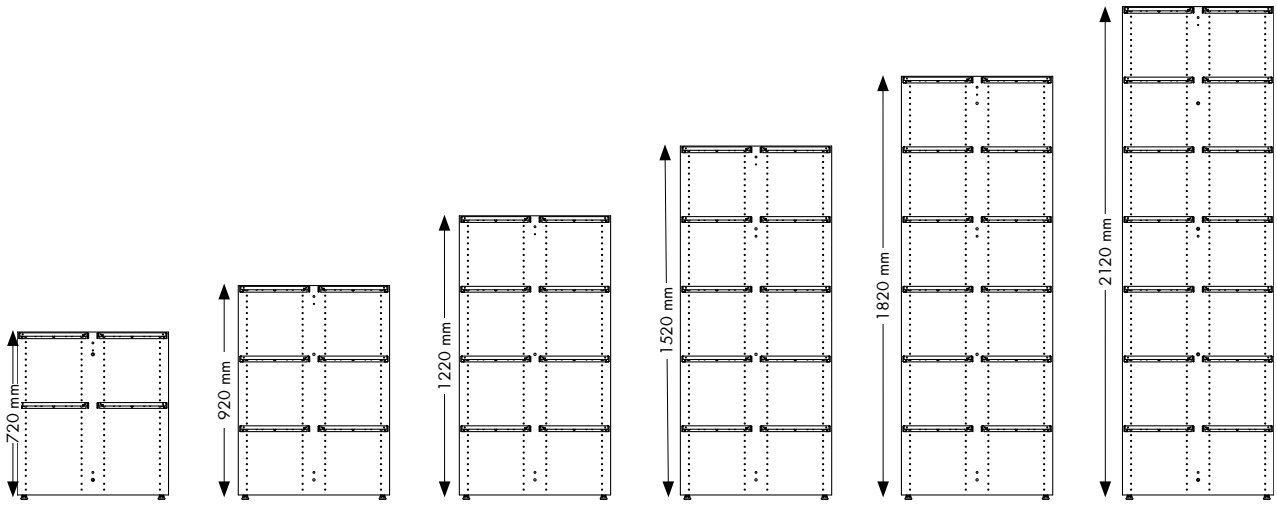

DEPTHS

Lingo Round sheving is available in 1 depth:
2 x 300 mm.

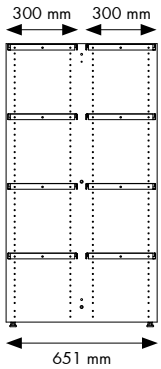

DIMENSIONS

LINGO ROUND SHELVING

LNGO ROUND 26°

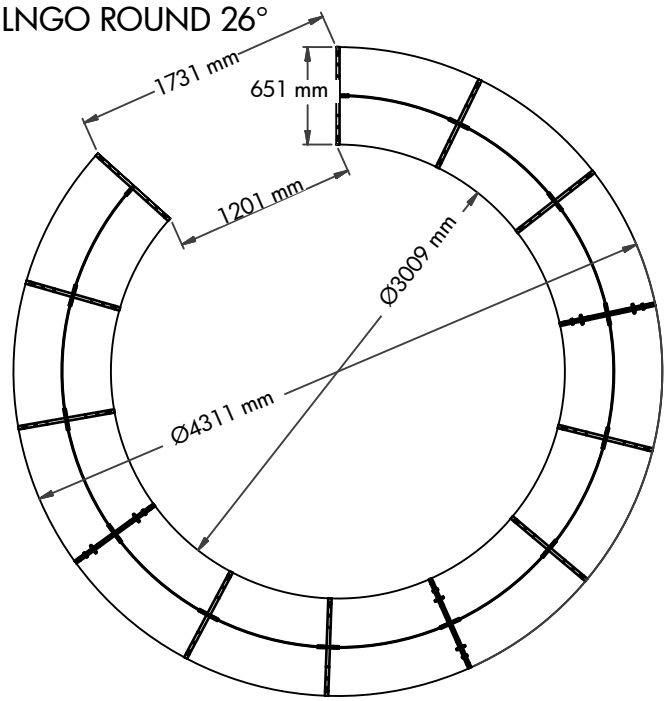

LINGO ROUND 18°

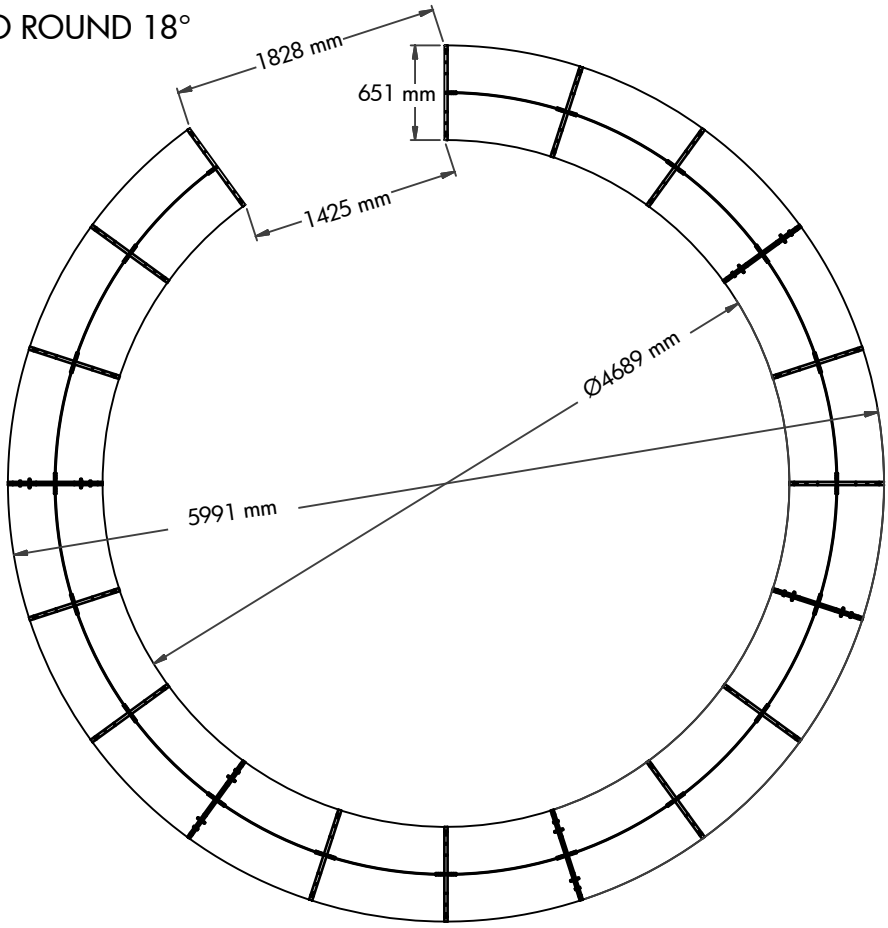

BAY CONSTRUCTION

STARTER AND ADD-ON BAYS

A starter bay includes one right and one left end panel with holes on the inside of the panel. To add another bay, you must take off the right end panel, insert the add-on bay (panel with holes on both sides) and fix the right end panel from the starter bay to the add-on bay. See example below.

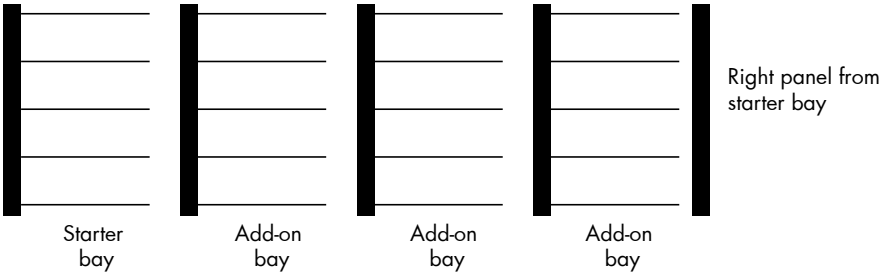

OVERLAYING TOP PLATES FOR STRAIGHT BAYS WITH ADJUSTABLE FEET

A straight overlaying top plate has a maximum length of 2750 mm.
If you build a shelving system with 1, 2 or 3 bays, then you can use just one freestanding top plate (depending on module size).
If you build a shelving system with more than 3 bays, then the overlaying top plates will be a combination of outer and intermediate overlaying top plates.

Freestanding wooden top plate
Is always used for 1 bay and can be used for 1, 2 or 3 bays. The top plate covers the end panels in both ends.

Total width mm				
Module	**500**	**750**	**900**	**1000**
1 bay	551	801	951	1056
2 bays	1078	1578	1878	2088
3 bays	1604	2354	-	-

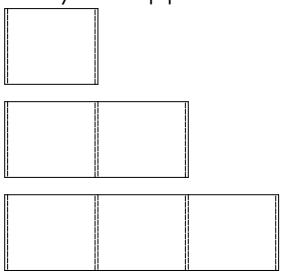

Outer wooden top plate
Can be used for 1, 2 or 3 bays in combination with either outer or intermediate top plates. The top plate covers one end panel.

Total width mm				
Module	**500**	**750**	**900**	**1000**
1 bay	539	789	939	1044
2 bays	1065	1565	1865	2075
3 bays	1592	2342	-	-

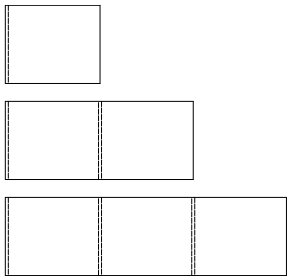

Intermediate wooden top plate
Can be used for 1, 2 or 3 bays in combination with either outer or intermediate top plates. The top plate only covers the intermediate panel.

Total width mm				
Module	**500**	**750**	**900**	**1000**
1 bay	526	776	926	1031
2 bays	1053	1553	1853	2063
3 bays	1829	2329	-	-

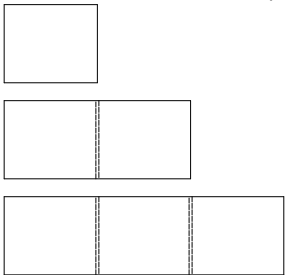

OVERLAYING TOP PLATES FOR ROUND BAYS WITH ADJUSTABLE FEET

If you build a shelving system with 1, 2 or 3 bays, then you can use just one freestanding top plate.
If you build a shelving system with more than 3 bays, then the overlaying top plates will be a combination of outer and intermediate overlaying top plates.

Freestanding wooden top plate
Is always used for 1 bay and can be used for 1, 2 or 3 bays. The top plate covers the end panels in both ends.

Dimensions mm				
Bay	**26˚x**	**26˚y**	**18˚x**	**18˚y**
1 bay	994	692	962	682
2 bays	1912	809	1875	770
3 bays	2732	994	2742	912

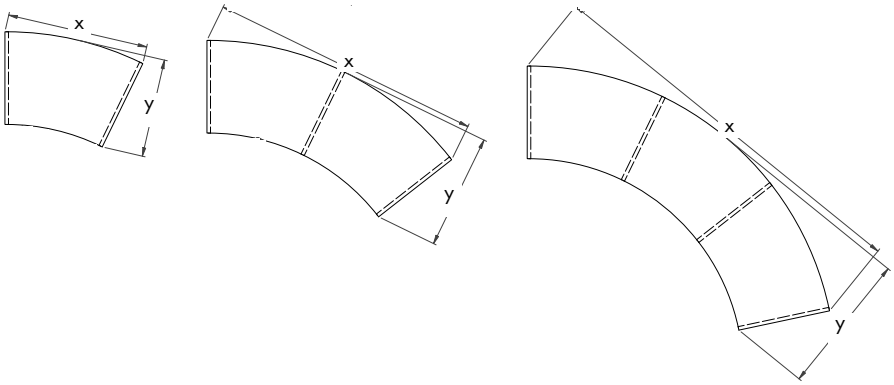

Left/right starter/end wooden top plate
Can be used for 1, 2 or 3 bays in combination with either outer or intermediate top plates. The top plate covers one end panel.

Dimensions mm				
Bay	**26˚x**	**26˚y**	**18˚x**	**18˚y**
1 bay	982	691	951	682
2 bays	1901	806	1861	770
3 bays	2723	990	2731	912

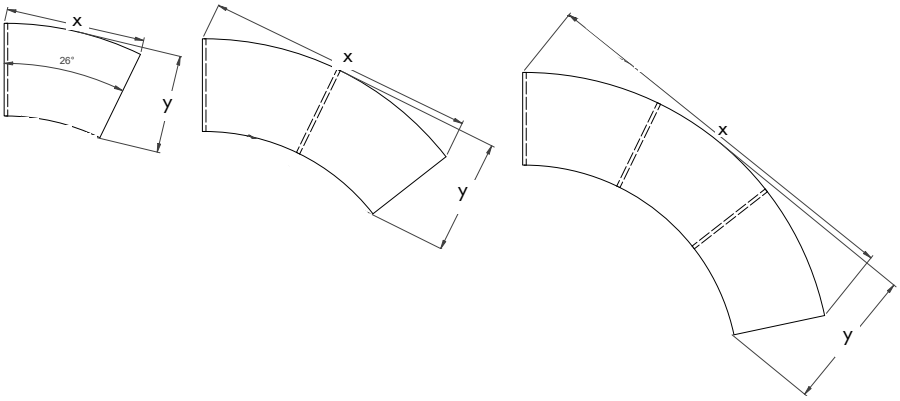

Intermediate wooden top plate
Can be used for 1, 2 or 3 bays in combination with either outer or intermediate top plates. The top plate only covers the intermediate panel.

Dimensions mm				
Bay	**26˚x**	**26˚y**	**18˚x**	**18˚y**
1 bay	982	691	940	677
2 bays	1901	806	1853	765
3 bays	2723	990	2720	907

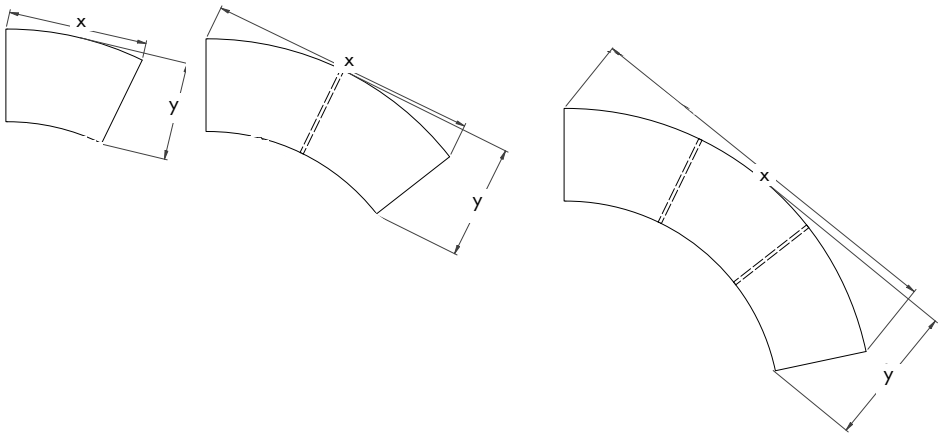

STRAIGHT AND ROUND COMBINATIONS

COMBINING STRAIGHT AND ROUND SHELVING
It is possible to combine round and straight shelving to create unique shelving - all depending on space available on location, shelving space required and design. Here are som examples:

CONFIGURATION NO. 1

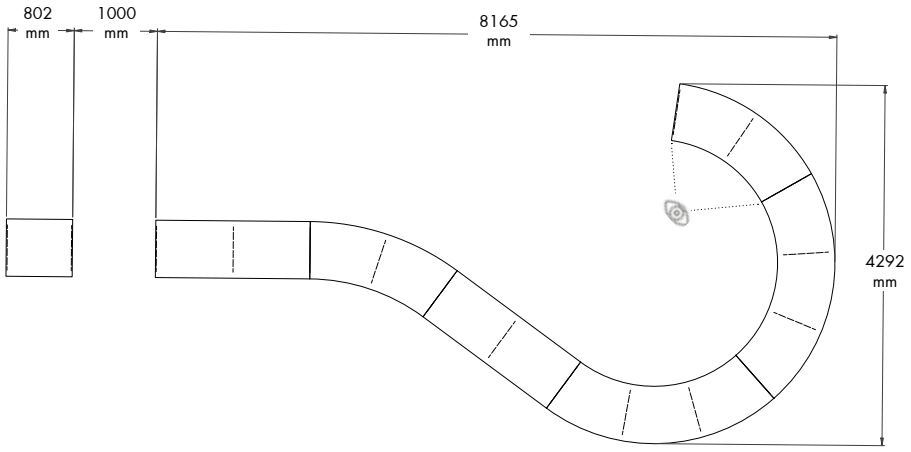

CONFIGURATION NO. 2

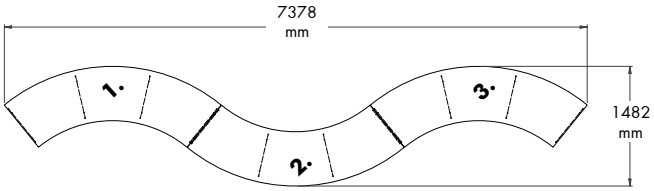

CONFIGURATION NO. 3

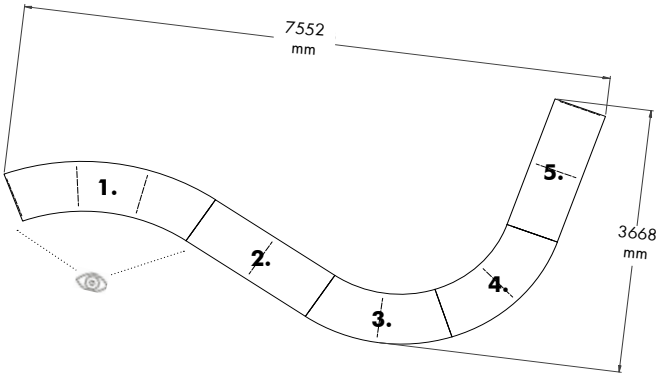

CONFIGURATION NO. 4

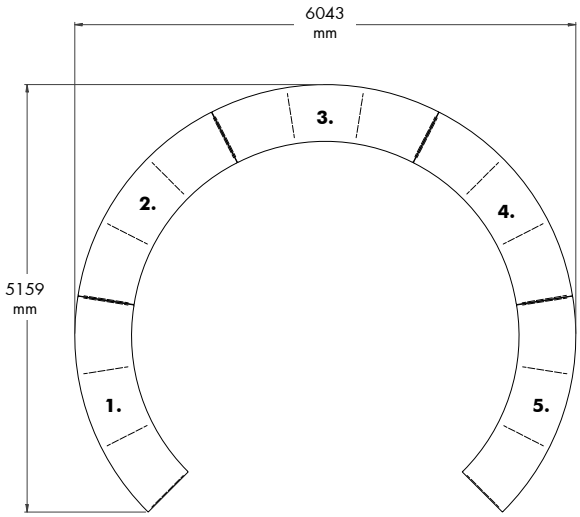

STRAIGHT AND ROUND COMBINATIONS

BCI

LINGO SHELVING SYSTEM

STEEL BACK FRAME - ADJUSTABLE FEET - FOR TOP SHELF

LINGO SHELVING SYSTEM

STEEL BACK FRAME - ADJUSTABLE FEET - FOR TOP SHELF

F14000/F14001/F14002/F14003/F14004/F14005/F14012/F14013/F14014/F14015/F14016/F14017

Shelving system with wooden panels and steel back frame. To be used with top shelf.
Starter bay includes 2 outer panels and 1 steel back frame.
Add-on bay includes 1 intermediate panel and 1 steel back frame.

- For top shelves, see pages 116-130.
- For shelves, see page 138-169.
- For accessories, see page 170-186.

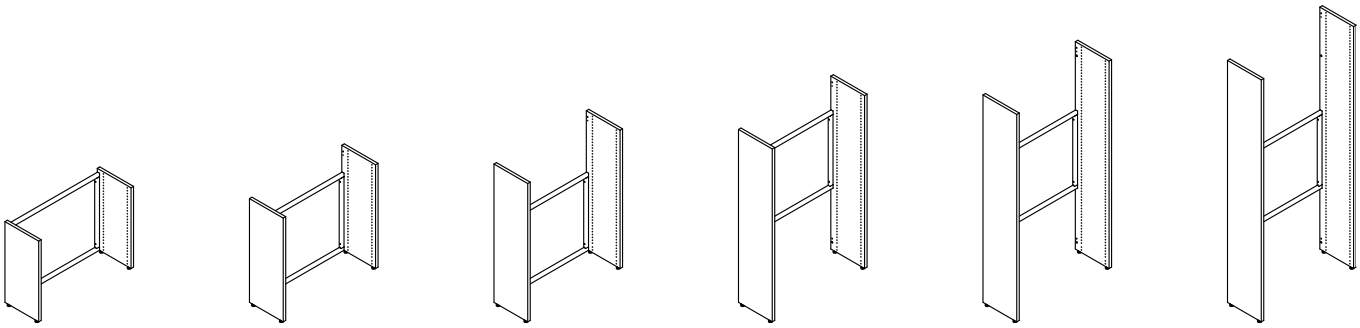

Single-sided starter bay - H720/920/1220/1520/1820/2120 mm

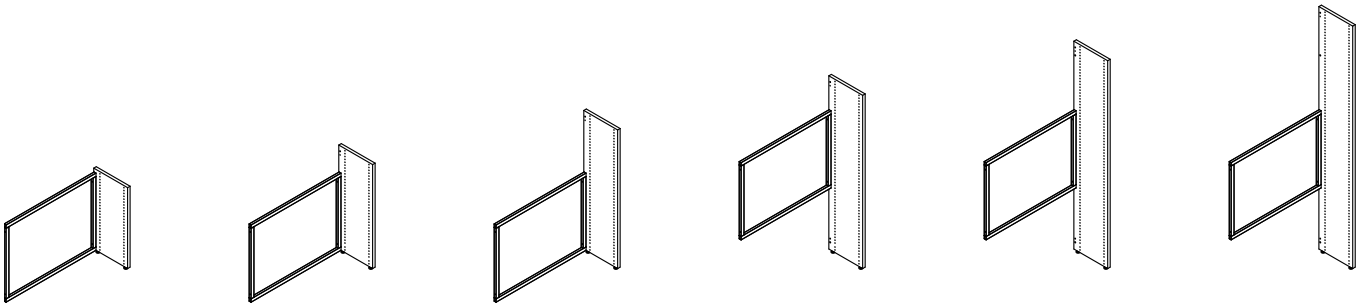

Single-sided add-on bay - H720/920/1220/1520/1820/2120 mm

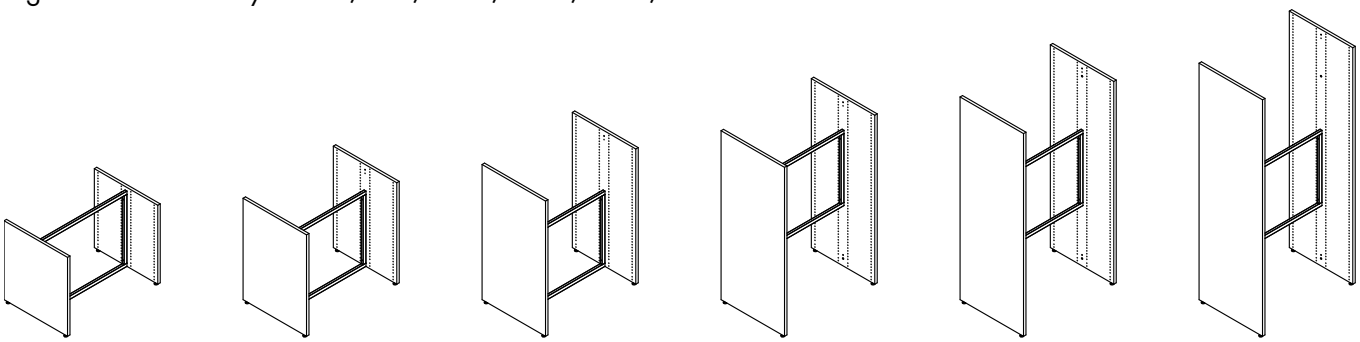

Double-sided starter bay - H720/920/1220/1520/1820/2120 mm

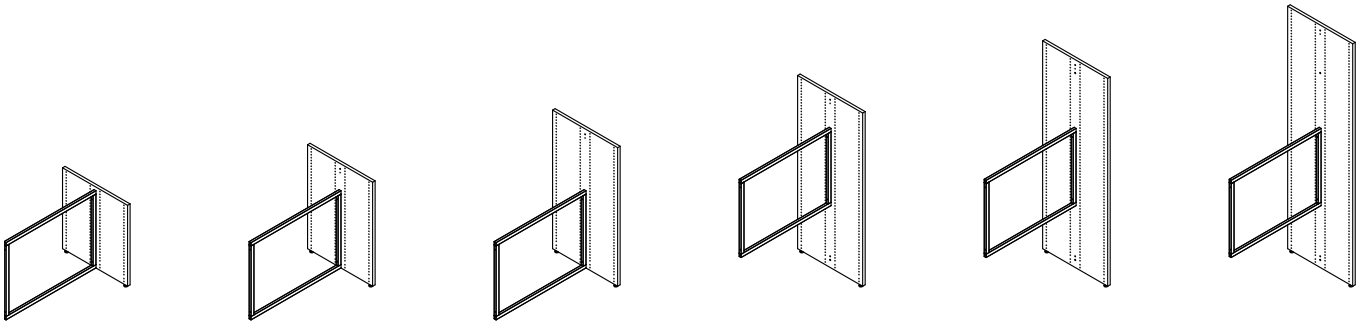

Double-sided add-on bay - H720/920/1220/1520/1820/2120 mm

LINGO SHELVING SYSTEM

SINGLE-SIDED - STEEL BACK FRAME - ADJUSTABLE FEET - FOR TOP SHELF

Painted and veneered Lingo Shelving Systems are FSC-certified.

H720 mm

Module mm	Shelf depth mm	Item no. Starter bay	Melamine F14000	Painted F14001	Veneer F14002	Item no. Add-on bay	Melamine F14003	Painted F14004	Veneer F14005
500	250	F140xx121040000000	-	-	-	F140xx121040000000	-	-	-
500	300	F140xx131040000000	-	-	-	F140xx131040000000	-	-	-
500	400	F140xx151040000000	-	-	-	F140xx151040000000	-	-	-
750	250	F140xx122040000000	-	-	-	F140xx122040000000	-	-	-
750	300	F140xx132040000000	-	-	-	F140xx132040000000	-	-	-
750	400	F140xx152040000000	-	-	-	F140xx152040000000	-	-	-
900	250	F140xx123040000000	-	-	-	F140xx123040000000	-	-	-
900	300	F140xx133040000000	-	-	-	F140xx133040000000	-	-	-
900	400	F140xx153040000000	-	-	-	F140xx153040000000	-	-	-
1000	250	F140xx124040000000	-	-	-	F140xx124040000000	-	-	-
1000	300	F140xx134040000000	-	-	-	F140xx134040000000	-	-	-
1000	400	F140xx154040000000	-	-	-	F140xx154040000000	-	-	-

H920 mm

Module mm	Shelf depth mm	Item no. Starter bay	Melamine F14000	Painted F14001	Veneer F14002	Item no. Add-on bay	Melamine F14003	Painted F14004	Veneer F14005
500	250	F140xx221040000000	-	-	-	F140xx221040000000	-	-	-
500	300	F140xx231040000000	-	-	-	F140xx231040000000	-	-	-
500	400	F140xx251040000000	-	-	-	F140xx251040000000	-	-	-
750	250	F140xx222040000000	-	-	-	F140xx222040000000	-	-	-
750	300	F140xx232040000000	-	-	-	F140xx232040000000	-	-	-
750	400	F140xx252040000000	-	-	-	F140xx252040000000	-	-	-
900	250	F140xx223040000000	-	-	-	F140xx223040000000	-	-	-
900	300	F140xx233040000000	-	-	-	F140xx233040000000	-	-	-
900	400	F140xx253040000000	-	-	-	F140xx253040000000	-	-	-
1000	250	F140xx224040000000	-	-	-	F140xx224040000000	-	-	-
1000	300	F140xx234040000000	-	-	-	F140xx234040000000	-	-	-
1000	400	F140xx254040000000	-	-	-	F140xx254040000000	-	-	-

H1220 mm

Module mm	Shelf depth mm	Item no. Starter bay	Melamine F14000	Painted F14001	Veneer F14002	Item no. Add-on bay	Melamine F14003	Painted F14004	Veneer F14005
500	250	F140xx321040000000	-	-	-	F140xx321040000000	-	-	-
500	300	F140xx331040000000	-	-	-	F140xx331040000000	-	-	-
500	400	F140xx351040000000	-	-	-	F140xx351040000000	-	-	-
750	250	F140xx322040000000	-	-	-	F140xx322040000000	-	-	-
750	300	F140xx332040000000	-	-	-	F140xx332040000000	-	-	-
750	400	F140xx352040000000	-	-	-	F140xx352040000000	-	-	-
900	250	F140xx323040000000	-	-	-	F140xx323040000000	-	-	-
900	300	F140xx333040000000	-	-	-	F140xx333040000000	-	-	-
900	400	F140xx353040000000	-	-	-	F140xx353040000000	-	-	-
1000	250	F140xx324040000000	-	-	-	F140xx324040000000	-	-	-
1000	300	F140xx334040000000	-	-	-	F140xx334040000000	-	-	-
1000	400	F140xx354040000000	-	-	-	F140xx354040000000	-	-	-

LINGO SHELVING SYSTEM

SINGLE-SIDED - STEEL BACK FRAME - ADJUSTABLE FEET - FOR TOP SHELF

Painted and veneered Lingo Shelving Systems are FSC-certified.

H1520 mm

Module mm	Shelf depth mm	Item no. Starter bay	Melamine F14000	Painted F14001	Veneer F14002	Item no. Add-on bay	Melamine F14003	Painted F14004	Veneer F14005
500	250	F140xx421040000000	-	-	-	F140xx421040000000	-	-	-
500	300	F140xx431040000000	-	-	-	F140xx431040000000	-	-	-
500	400	F140xx451040000000	-	-	-	F140xx451040000000	-	-	-
750	250	F140xx422040000000	-	-	-	F140xx422040000000	-	-	-
750	300	F140xx432040000000	-	-	-	F140xx432040000000	-	-	-
750	400	F140xx452040000000	-	-	-	F140xx452040000000	-	-	-
900	250	F140xx423040000000	-	-	-	F140xx423040000000	-	-	-
900	300	F140xx433040000000	-	-	-	F140xx433040000000	-	-	-
900	400	F140xx453040000000	-	-	-	F140xx453040000000	-	-	-
1000	250	F140xx424040000000	-	-	-	F140xx424040000000	-	-	-
1000	300	F140xx434040000000	-	-	-	F140xx434040000000	-	-	-
1000	400	F140xx454040000000	-	-	-	F140xx454040000000	-	-	-

H1820 mm

Module mm	Shelf depth mm	Item no. Starter bay	Melamine F14000	Painted F14001	Veneer F14002	Item no. Add-on bay	Melamine F14003	Painted F14004	Veneer F14005
500	250	F140xx521040000000	-	-	-	F140xx521040000000	-	-	-
500	300	F140xx531040000000	-	-	-	F140xx531040000000	-	-	-
500	400	F140xx551040000000	-	-	-	F140xx551040000000	-	-	-
750	250	F140xx522040000000	-	-	-	F140xx522040000000	-	-	-
750	300	F140xx532040000000	-	-	-	F140xx532040000000	-	-	-
750	400	F140xx552040000000	-	-	-	F140xx552040000000	-	-	-
900	250	F140xx523040000000	-	-	-	F140xx523040000000	-	-	-
900	300	F140xx533040000000	-	-	-	F140xx533040000000	-	-	-
900	400	F140xx553040000000	-	-	-	F140xx553040000000	-	-	-
1000	250	F140xx524040000000	-	-	-	F140xx524040000000	-	-	-
1000	300	F140xx534040000000	-	-	-	F140xx534040000000	-	-	-
1000	400	F140xx554040000000	-	-	-	F140xx554040000000	-	-	-

H2120 mm

Module mm	Shelf depth mm	Item no. Starter bay	Melamine F14000	Painted F14001	Veneer F14002	Item no. Add-on bay	Melamine F14003	Painted F14004	Veneer F14005
500	250	F140xx621040000000	-	-	-	F140xx621040000000	-	-	-
500	300	F140xx631040000000	-	-	-	F140xx631040000000	-	-	-
500	400	F140xx651040000000	-	-	-	F140xx651040000000	-	-	-
750	250	F140xx622040000000	-	-	-	F140xx622040000000	-	-	-
750	300	F140xx632040000000	-	-	-	F140xx632040000000	-	-	-
750	400	F140xx652040000000	-	-	-	F140xx652040000000	-	-	-
900	250	F140xx623040000000	-	-	-	F140xx623040000000	-	-	-
900	300	F140xx633040000000	-	-	-	F140xx633040000000	-	-	-
900	400	F140xx653040000000	-	-	-	F140xx653040000000	-	-	-
1000	250	F140xx624040000000	-	-	-	F140xx624040000000	-	-	-
1000	300	F140xx634040000000	-	-	-	F140xx634040000000	-	-	-
1000	400	F140xx654040000000	-	-	-	F140xx654040000000	-	-	-

LINGO SHELVING SYSTEM

DOUBLE-SIDED - STEEL BACK FRAME - ADJUSTABLE FEET - FOR TOP SHELF

Painted and veneered Lingo Shelving Systems are FSC-certified.

H720 mm

Module mm	Shelf depth mm	Item no. Starter bay	Melamine F14012	Painted F14013	Veneer F14014	Item no. Add-on bay	Melamine F14015	Painted F14016	Veneer F14017
500	250	F140xx121040000000	-	-	-	F140xx121040000000	-	-	-
500	300	F140xx131040000000	-	-	-	F140xx131040000000	-	-	-
500	400	F140xx151040000000	-	-	-	F140xx151040000000	-	-	-
750	250	F140xx122040000000	-	-	-	F140xx122040000000	-	-	-
750	300	F140xx132040000000	-	-	-	F140xx132040000000	-	-	-
750	400	F140xx152040000000	-	-	-	F140xx152040000000	-	-	-
900	250	F140xx123040000000	-	-	-	F140xx123040000000	-	-	-
900	300	F140xx133040000000	-	-	-	F140xx133040000000	-	-	-
900	400	F140xx153040000000	-	-	-	F140xx153040000000	-	-	-
1000	250	F140xx124040000000	-	-	-	F140xx124040000000	-	-	-
1000	300	F140xx134040000000	-	-	-	F140xx134040000000	-	-	-
1000	400	F140xx154040000000	-	-	-	F140xx154040000000	-	-	-

H920 mm

Module mm	Shelf depth mm	Item no. Starter bay	Melamine F14012	Painted F14013	Veneer F14014	Item no. Add-on bay	Melamine F14015	Painted F14016	Veneer F14017
500	250	F140xx221040000000	-	-	-	F140xx221040000000	-	-	-
500	300	F140xx231040000000	-	-	-	F140xx231040000000	-	-	-
500	400	F140xx251040000000	-	-	-	F140xx251040000000	-	-	-
750	250	F140xx222040000000	-	-	-	F140xx222040000000	-	-	-
750	300	F140xx232040000000	-	-	-	F140xx232040000000	-	-	-
750	400	F140xx252040000000	-	-	-	F140xx252040000000	-	-	-
900	250	F140xx223040000000	-	-	-	F140xx223040000000	-	-	-
900	300	F140xx233040000000	-	-	-	F140xx233040000000	-	-	-
900	400	F140xx253040000000	-	-	-	F140xx253040000000	-	-	-
1000	250	F140xx224040000000	-	-	-	F140xx224040000000	-	-	-
1000	300	F140xx234040000000	-	-	-	F140xx234040000000	-	-	-
1000	400	F140xx254040000000	-	-	-	F140xx254040000000	-	-	-

H1220 mm

Module mm	Shelf depth mm	Item no. Starter bay	Melamine F14012	Painted F14013	Veneer F14014	Item no. Add-on bay	Melamine F14015	Painted F14016	Veneer F14017
500	250	F140xx321040000000	-	-	-	F140xx321040000000	-	-	-
500	300	F140xx331040000000	-	-	-	F140xx331040000000	-	-	-
500	400	F140xx351040000000	-	-	-	F140xx351040000000	-	-	-
750	250	F140xx322040000000	-	-	-	F140xx322040000000	-	-	-
750	300	F140xx332040000000	-	-	-	F140xx332040000000	-	-	-
750	400	F140xx352040000000	-	-	-	F140xx352040000000	-	-	-
900	250	F140xx323040000000	-	-	-	F140xx323040000000	-	-	-
900	300	F140xx333040000000	-	-	-	F140xx333040000000	-	-	-
900	400	F140xx353040000000	-	-	-	F140xx353040000000	-	-	-
1000	250	F140xx324040000000	-	-	-	F140xx324040000000	-	-	-
1000	300	F140xx334040000000	-	-	-	F140xx334040000000	-	-	-
1000	400	F140xx354040000000	-	-	-	F140xx354040000000	-	-	-

LINGO SHELVING SYSTEM

DOUBLE-SIDED - STEEL BACK FRAME - ADJUSTABLE FEET - FOR TOP SHELF

Painted and veneered Lingo Shelving Systems are FSC-certified.

H1520 mm

Module mm	Shelf depth mm	Item no. Starter bay	Melamine F14012	Painted F14013	Veneer F14014	Item no. Add-on bay	Melamine F14015	Painted F14016	Veneer F14017
500	250	F140xx421040000000	-	-	-	F140xx421040000000	-	-	-
500	300	F140xx431040000000	-	-	-	F140xx431040000000	-	-	-
500	400	F140xx451040000000	-	-	-	F140xx451040000000	-	-	-
750	250	F140xx422040000000	-	-	-	F140xx422040000000	-	-	-
750	300	F140xx432040000000	-	-	-	F140xx432040000000	-	-	-
750	400	F140xx452040000000	-	-	-	F140xx452040000000	-	-	-
900	250	F140xx423040000000	-	-	-	F140xx423040000000	-	-	-
900	300	F140xx433040000000	-	-	-	F140xx433040000000	-	-	-
900	400	F140xx453040000000	-	-	-	F140xx453040000000	-	-	-
1000	250	F140xx424040000000	-	-	-	F140xx424040000000	-	-	-
1000	300	F140xx434040000000	-	-	-	F140xx434040000000	-	-	-
1000	400	F140xx454040000000	-	-	-	F140xx454040000000	-	-	-

H1820 mm

Module mm	Shelf depth mm	Item no. Starter bay	Melamine F14012	Painted F14013	Veneer F14014	Item no. Add-on bay	Melamine F14015	Painted F14016	Veneer F14017
500	250	F140xx521040000000	-	-	-	F140xx521040000000	-	-	-
500	300	F140xx531040000000	-	-	-	F140xx531040000000	-	-	-
500	400	F140xx551040000000	-	-	-	F140xx551040000000	-	-	-
750	250	F140xx522040000000	-	-	-	F140xx522040000000	-	-	-
750	300	F140xx532040000000	-	-	-	F140xx532040000000	-	-	-
750	400	F140xx552040000000	-	-	-	F140xx552040000000	-	-	-
900	250	F140xx523040000000	-	-	-	F140xx523040000000	-	-	-
900	300	F140xx533040000000	-	-	-	F140xx533040000000	-	-	-
900	400	F140xx553040000000	-	-	-	F140xx553040000000	-	-	-
1000	250	F140xx524040000000	-	-	-	F140xx524040000000	-	-	-
1000	300	F140xx534040000000	-	-	-	F140xx534040000000	-	-	-
1000	400	F140xx554040000000	-	-	-	F140xx554040000000	-	-	-

H2120 mm

Module mm	Shelf depth mm	Item no. Starter bay	Melamine F14012	Painted F14013	Veneer F14014	Item no. Add-on bay	Melamine F14015	Painted F14016	Veneer F14017
500	250	F140xx621040000000	-	-	-	F140xx621040000000	-	-	-
500	300	F140xx631040000000	-	-	-	F140xx631040000000	-	-	-
500	400	F140xx651040000000	-	-	-	F140xx651040000000	-	-	-
750	250	F140xx622040000000	-	-	-	F140xx622040000000	-	-	-
750	300	F140xx632040000000	-	-	-	F140xx632040000000	-	-	-
750	400	F140xx652040000000	-	-	-	F140xx652040000000	-	-	-
900	250	F140xx623040000000	-	-	-	F140xx623040000000	-	-	-
900	300	F140xx633040000000	-	-	-	F140xx633040000000	-	-	-
900	400	F140xx653040000000	-	-	-	F140xx653040000000	-	-	-
1000	250	F140xx624040000000	-	-	-	F140xx624040000000	-	-	-
1000	300	F140xx634040000000	-	-	-	F140xx634040000000	-	-	-
1000	400	F140xx654040000000	-	-	-	F140xx654040000000	-	-	-

LINGO SHELVING SYSTEM

HIGH WOODEN BACK PANEL - ADJUSTABLE FEET - FOR TOP SHELF

LINGO SHELVING SYSTEM

HIGH WOODEN BACK PANEL - ADJUSTABLE FEET - FOR TOP SHELF

F14000/F14001/F14002/F14003/F14004/F14005/F14012/F14013/F14014/F14015/F14016/F14017

Shelving system with wooden panels and high wooden back panel
To be used with ST1 standard depth, ST2, ST4 and WT1 standard depth top shelf.
Starter bay includes 2 outer panels and 1 wooden back panel.
Add-on bay includes 1 intermediate panel and 1 wooden back panel.

- For top shelves, see pages 116-130.
- For shelves, see page 138-169.
- For accessories, see page 170-186.

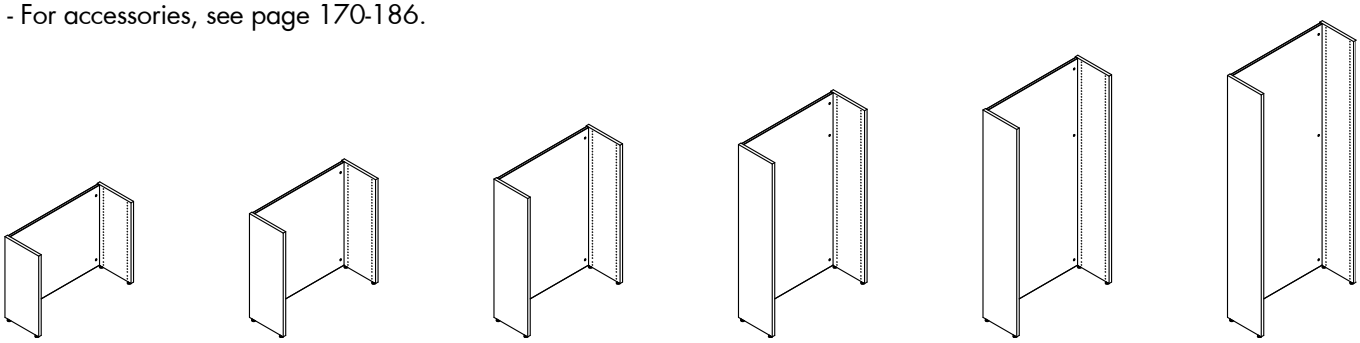

Single-sided starter bay - H720/920/1220/1520/1820/2120 mm

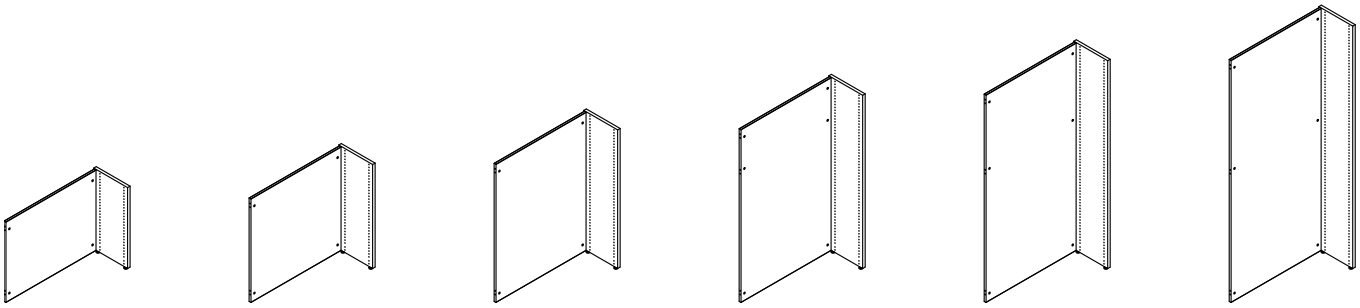

Single-sided add-on bay - H720/920/1220/1520/1820/2120 mm

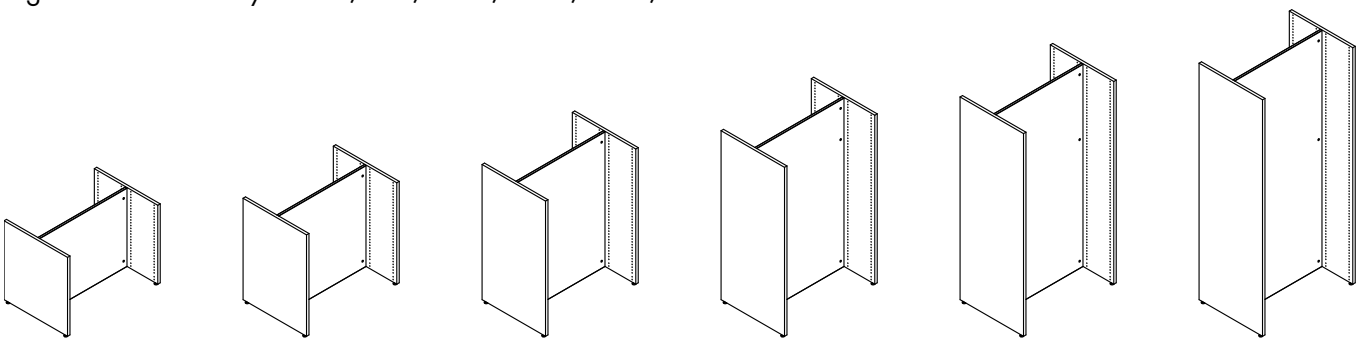

Double-sided starter bay - H720/920/1220/1520/1820/2120 mm

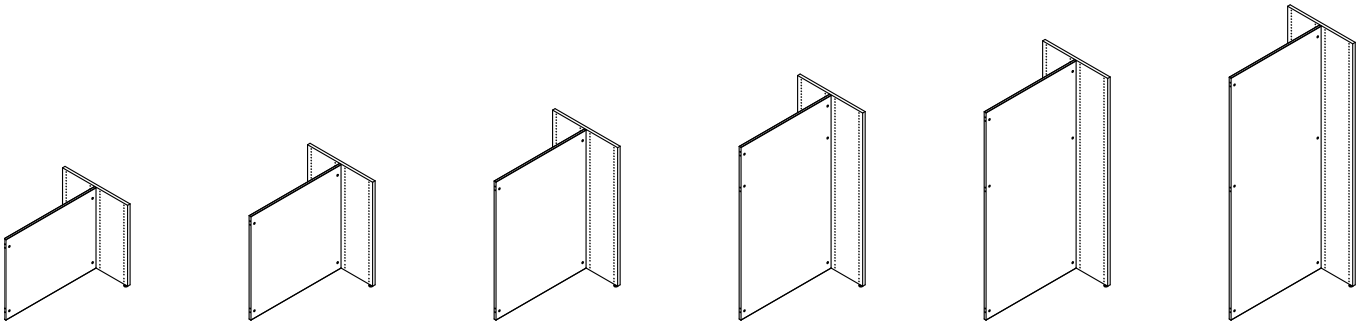

Double-sided add-on bay - H720/920/1220/1520/1820/2120 mm

LINGO SHELVING SYSTEM

SINGLE-SIDED - HIGH WOODEN BACK PANEL - ADJUSTABLE FEET - FOR TOP SHELF

Painted and veneered Lingo Shelving Systems are FSC-certified.

H720 mm

Module mm	Shelf depth mm	Item no. Starter bay	Melamine F14000	Painted F14001	Veneer F14002	Item no. Add-on bay	Melamine F14003	Painted F14004	Veneer F14005
500	250	F140xx121030000000	-	-	-	F140xx121030000000	-	-	-
500	300	F140xx131030000000	-	-	-	F140xx131030000000	-	-	-
500	400	F140xx151030000000	-	-	-	F140xx151030000000	-	-	-
750	250	F140xx122030000000	-	-	-	F140xx122030000000	-	-	-
750	300	F140xx132030000000	-	-	-	F140xx132030000000	-	-	-
750	400	F140xx152030000000	-	-	-	F140xx152030000000	-	-	-
900	250	F140xx123030000000	-	-	-	F140xx123030000000	-	-	-
900	300	F140xx133030000000	-	-	-	F140xx133030000000	-	-	-
900	400	F140xx153030000000	-	-	-	F140xx153030000000	-	-	-
1000	250	F140xx124030000000	-	-	-	F140xx124030000000	-	-	-
1000	300	F140xx134030000000	-	-	-	F140xx134030000000	-	-	-
1000	400	F140xx154030000000	-	-	-	F140xx154030000000	-	-	-

H920 mm

Module mm	Shelf depth mm	Item no. Starter bay	Melamine F14000	Painted F14001	Veneer F14002	Item no. Add-on bay	Melamine F14003	Painted F14004	Veneer F14005
500	250	F140xx221030000000	-	-	-	F140xx221030000000	-	-	-
500	300	F140xx231030000000	-	-	-	F140xx231030000000	-	-	-
500	400	F140xx251030000000	-	-	-	F140xx251030000000	-	-	-
750	250	F140xx222030000000	-	-	-	F140xx222030000000	-	-	-
750	300	F140xx232030000000	-	-	-	F140xx232030000000	-	-	-
750	400	F140xx252030000000	-	-	-	F140xx252030000000	-	-	-
900	250	F140xx223030000000	-	-	-	F140xx223030000000	-	-	-
900	300	F140xx233030000000	-	-	-	F140xx233030000000	-	-	-
900	400	F140xx253030000000	-	-	-	F140xx253030000000	-	-	-
1000	250	F140xx224030000000	-	-	-	F140xx224030000000	-	-	-
1000	300	F140xx234030000000	-	-	-	F140xx234030000000	-	-	-
1000	400	F140xx254030000000	-	-	-	F140xx254030000000	-	-	-

H1220 mm

Module mm	Shelf depth mm	Item no. Starter bay	Melamine F14000	Painted F14001	Veneer F14002	Item no. Add-on bay	Melamine F14003	Painted F14004	Veneer F14005
500	250	F140xx321030000000	-	-	-	F140xx321030000000	-	-	-
500	300	F140xx331030000000	-	-	-	F140xx331030000000	-	-	-
500	400	F140xx351030000000	-	-	-	F140xx351030000000	-	-	-
750	250	F140xx322030000000	-	-	-	F140xx322030000000	-	-	-
750	300	F140xx332030000000	-	-	-	F140xx332030000000	-	-	-
750	400	F140xx352030000000	-	-	-	F140xx352030000000	-	-	-
900	250	F140xx323030000000	-	-	-	F140xx323030000000	-	-	-
900	300	F140xx333030000000	-	-	-	F140xx333030000000	-	-	-
900	400	F140xx353030000000	-	-	-	F140xx353030000000	-	-	-
1000	250	F140xx324030000000	-	-	-	F140xx324030000000	-	-	-
1000	300	F140xx334030000000	-	-	-	F140xx334030000000	-	-	-
1000	400	F140xx354030000000	-	-	-	F140xx354030000000	-	-	-

LINGO SHELVING SYSTEM

SINGLE-SIDED - HIGH WOODEN BACK PANEL - ADJUSTABLE FEET - FOR TOP SHELF

Painted and veneered Lingo Shelving Systems are FSC-certified.

H1520 mm

Module mm	Shelf depth mm	Item no. Starter bay	Melamine F14000	Painted F14001	Veneer F14002	Item no. Add-on bay	Melamine F14003	Painted F14004	Veneer F14005
500	250	F140xx421030000000	-	-	-	F140xx421030000000	-	-	-
500	300	F140xx431030000000	-	-	-	F140xx431030000000	-	-	-
500	400	F140xx451030000000	-	-	-	F140xx451030000000	-	-	-
750	250	F140xx422030000000	-	-	-	F140xx422030000000	-	-	-
750	300	F140xx432030000000	-	-	-	F140xx432030000000	-	-	-
750	400	F140xx452030000000	-	-	-	F140xx452030000000	-	-	-
900	250	F140xx423030000000	-	-	-	F140xx423030000000	-	-	-
900	300	F140xx433030000000	-	-	-	F140xx433030000000	-	-	-
900	400	F140xx453030000000	-	-	-	F140xx453030000000	-	-	-
1000	250	F140xx424030000000	-	-	-	F140xx424030000000	-	-	-
1000	300	F140xx434030000000	-	-	-	F140xx434030000000	-	-	-
1000	400	F140xx454030000000	-	-	-	F140xx454030000000	-	-	-

H1820 mm

Module mm	Shelf depth mm	Item no. Starter bay	Melamine F14000	Painted F14001	Veneer F14002	Item no. Add-on bay	Melamine F14003	Painted F14004	Veneer F14005
500	250	F140xx521030000000	-	-	-	F140xx521030000000	-	-	-
500	300	F140xx531030000000	-	-	-	F140xx531030000000	-	-	-
500	400	F140xx551030000000	-	-	-	F140xx551030000000	-	-	-
750	250	F140xx522030000000	-	-	-	F140xx522030000000	-	-	-
750	300	F140xx532030000000	-	-	-	F140xx532030000000	-	-	-
750	400	F140xx552030000000	-	-	-	F140xx552030000000	-	-	-
900	250	F140xx523030000000	-	-	-	F140xx523030000000	-	-	-
900	300	F140xx533030000000	-	-	-	F140xx533030000000	-	-	-
900	400	F140xx553030000000	-	-	-	F140xx553030000000	-	-	-
1000	250	F140xx524030000000	-	-	-	F140xx524030000000	-	-	-
1000	300	F140xx534030000000	-	-	-	F140xx534030000000	-	-	-
1000	400	F140xx554030000000	-	-	-	F140xx554030000000	-	-	-

H2120 mm

Module mm	Shelf depth mm	Item no. Starter bay	Melamine F14000	Painted F14001	Veneer F14002	Item no. Add-on bay	Melamine F14003	Painted F14004	Veneer F14005
500	250	F140xx621030000000	-	-	-	F140xx621030000000	-	-	-
500	300	F140xx631030000000	-	-	-	F140xx631030000000	-	-	-
500	400	F140xx651030000000	-	-	-	F140xx651030000000	-	-	-
750	250	F140xx622030000000	-	-	-	F140xx622030000000	-	-	-
750	300	F140xx632030000000	-	-	-	F140xx632030000000	-	-	-
750	400	F140xx652030000000	-	-	-	F140xx652030000000	-	-	-
900	250	F140xx623030000000	-	-	-	F140xx623030000000	-	-	-
900	300	F140xx633030000000	-	-	-	F140xx633030000000	-	-	-
900	400	F140xx653030000000	-	-	-	F140xx653030000000	-	-	-
1000	250	F140xx624030000000	-	-	-	F140xx624030000000	-	-	-
1000	300	F140xx634030000000	-	-	-	F140xx634030000000	-	-	-
1000	400	F140xx654030000000	-	-	-	F140xx654030000000	-	-	-

LINGO SHELVING SYSTEM

DOUBLE-SIDED - HIGH WOODEN BACK PANEL - ADJUSTABLE FEET - FOR TOP SHELF

Painted and veneered Lingo Shelving Systems are FSC-certified.

H720 mm

Module mm	Shelf depth mm	Item no. Starter bay	Melamine F14012	Painted F14013	Veneer F14014	Item no. Add-on bay	Melamine F14015	Painted F14016	Veneer F14017
500	250	F140xx121030000000	-	-	-	F140xx121030000000	-	-	-
500	300	F140xx131030000000	-	-	-	F140xx131030000000	-	-	-
500	400	F140xx151030000000	-	-	-	F140xx151030000000	-	-	-
750	250	F140xx122030000000	-	-	-	F140xx122030000000	-	-	-
750	300	F140xx132030000000	-	-	-	F140xx132030000000	-	-	-
750	400	F140xx152030000000	-	-	-	F140xx152030000000	-	-	-
900	250	F140xx123030000000	-	-	-	F140xx123030000000	-	-	-
900	300	F140xx133030000000	-	-	-	F140xx133030000000	-	-	-
900	400	F140xx153030000000	-	-	-	F140xx153030000000	-	-	-
1000	250	F140xx124030000000	-	-	-	F140xx124030000000	-	-	-
1000	300	F140xx134030000000	-	-	-	F140xx134030000000	-	-	-
1000	400	F140xx154030000000	-	-	-	F140xx154030000000	-	-	-

H920 mm

Module mm	Shelf depth mm	Item no. Starter bay	Melamine F14012	Painted F14013	Veneer F14014	Item no. Add-on bay	Melamine F14015	Painted F14016	Veneer F14017
500	250	F140xx221030000000	-	-	-	F140xx221030000000	-	-	-
500	300	F140xx231030000000	-	-	-	F140xx231030000000	-	-	-
500	400	F140xx251030000000	-	-	-	F140xx251030000000	-	-	-
750	250	F140xx222030000000	-	-	-	F140xx222030000000	-	-	-
750	300	F140xx232030000000	-	-	-	F140xx232030000000	-	-	-
750	400	F140xx252030000000	-	-	-	F140xx252030000000	-	-	-
900	250	F140xx223030000000	-	-	-	F140xx223030000000	-	-	-
900	300	F140xx233030000000	-	-	-	F140xx233030000000	-	-	-
900	400	F140xx253030000000	-	-	-	F140xx253030000000	-	-	-
1000	250	F140xx224030000000	-	-	-	F140xx224030000000	-	-	-
1000	300	F140xx234030000000	-	-	-	F140xx234030000000	-	-	-
1000	400	F140xx254030000000	-	-	-	F140xx254030000000	-	-	-

H1220 mm

Module mm	Shelf depth mm	Item no. Starter bay	Melamine F14012	Painted F14013	Veneer F14014	Item no. Add-on bay	Melamine F14015	Painted F14016	Veneer F14017
500	250	F140xx321030000000	-	-	-	F140xx321030000000	-	-	-
500	300	F140xx331030000000	-	-	-	F140xx331030000000	-	-	-
500	400	F140xx351030000000	-	-	-	F140xx351030000000	-	-	-
750	250	F140xx322030000000	-	-	-	F140xx322030000000	-	-	-
750	300	F140xx332030000000	-	-	-	F140xx332030000000	-	-	-
750	400	F140xx352030000000	-	-	-	F140xx352030000000	-	-	-
900	250	F140xx323030000000	-	-	-	F140xx323030000000	-	-	-
900	300	F140xx333030000000	-	-	-	F140xx333030000000	-	-	-
900	400	F140xx353030000000	-	-	-	F140xx353030000000	-	-	-
1000	250	F140xx324030000000	-	-	-	F140xx324030000000	-	-	-
1000	300	F140xx334030000000	-	-	-	F140xx334030000000	-	-	-
1000	400	F140xx354030000000	-	-	-	F140xx354030000000	-	-	-

LINGO SHELVING SYSTEM

DOUBLE-SIDED - HIGH WOODEN BACK PANEL - ADJUSTABLE FEET - FOR TOP SHELF

Painted and veneered Lingo Shelving Systems are FSC-certified.

H1520 mm

Module mm	Shelf depth mm	Item no. Starter bay	Melamine F14012	Painted F14013	Veneer F14014	Item no. Add-on bay	Melamine F14015	Painted F14016	Veneer F14017
500	250	F140xx421030000000	-	-	-	F140xx421030000000	-	-	-
500	300	F140xx431030000000	-	-	-	F140xx431030000000	-	-	-
500	400	F140xx451030000000	-	-	-	F140xx451030000000	-	-	-
750	250	F140xx422030000000	-	-	-	F140xx422030000000	-	-	-
750	300	F140xx432030000000	-	-	-	F140xx432030000000	-	-	-
750	400	F140xx452030000000	-	-	-	F140xx452030000000	-	-	-
900	250	F140xx423030000000	-	-	-	F140xx423030000000	-	-	-
900	300	F140xx433030000000	-	-	-	F140xx433030000000	-	-	-
900	400	F140xx453030000000	-	-	-	F140xx453030000000	-	-	-
1000	250	F140xx424030000000	-	-	-	F140xx424030000000	-	-	-
1000	300	F140xx434030000000	-	-	-	F140xx434030000000	-	-	-
1000	400	F140xx454030000000	-	-	-	F140xx454030000000	-	-	-

H1820 mm

Module mm	Shelf depth mm	Item no. Starter bay	Melamine F14012	Painted F14013	Veneer F14014	Item no. Add-on bay	Melamine F14015	Painted F14016	Veneer F14017
500	250	F140xx521030000000	-	-	-	F140xx521030000000	-	-	-
500	300	F140xx531030000000	-	-	-	F140xx531030000000	-	-	-
500	400	F140xx551030000000	-	-	-	F140xx551030000000	-	-	-
750	250	F140xx522030000000	-	-	-	F140xx522030000000	-	-	-
750	300	F140xx532030000000	-	-	-	F140xx532030000000	-	-	-
750	400	F140xx552030000000	-	-	-	F140xx552030000000	-	-	-
900	250	F140xx523030000000	-	-	-	F140xx523030000000	-	-	-
900	300	F140xx533030000000	-	-	-	F140xx533030000000	-	-	-
900	400	F140xx553030000000	-	-	-	F140xx553030000000	-	-	-
1000	250	F140xx524030000000	-	-	-	F140xx524030000000	-	-	-
1000	300	F140xx534030000000	-	-	-	F140xx534030000000	-	-	-
1000	400	F140xx554030000000	-	-	-	F140xx554030000000	-	-	-

H2120 mm

Module mm	Shelf depth mm	Item no. Starter bay	Melamine F14012	Painted F14013	Veneer F14014	Item no. Add-on bay	Melamine F14015	Painted F14016	Veneer F14017
500	250	F140xx621030000000	-	-	-	F140xx621030000000	-	-	-
500	300	F140xx631030000000	-	-	-	F140xx631030000000	-	-	-
500	400	F140xx651030000000	-	-	-	F140xx651030000000	-	-	-
750	250	F140xx622030000000	-	-	-	F140xx622030000000	-	-	-
750	300	F140xx632030000000	-	-	-	F140xx632030000000	-	-	-
750	400	F140xx652030000000	-	-	-	F140xx652030000000	-	-	-
900	250	F140xx623030000000	-	-	-	F140xx623030000000	-	-	-
900	300	F140xx633030000000	-	-	-	F140xx633030000000	-	-	-
900	400	F140xx653030000000	-	-	-	F140xx653030000000	-	-	-
1000	250	F140xx624030000000	-	-	-	F140xx624030000000	-	-	-
1000	300	F140xx634030000000	-	-	-	F140xx634030000000	-	-	-
1000	400	F140xx654030000000	-	-	-	F140xx654030000000	-	-	-

LINGO SHELVING SYSTEM

LOW WOODEN BACK PANEL - ADJUSTABLE FEET - FOR TOP SHELF

LINGO SHELVING SYSTEM

LOW WOODEN BACK PANEL - ADJUSTABLE FEET - FOR TOP SHELF

F14000/F14001/F14002/F14003/F14004/F14005/F14012/F14013/F14014/F14015/F14016/F14017

Shelving system with wooden panels and low wooden back panel.
To be used with ST1 full depth, ST1 double-sided, WT2 full depth and WT3 double-sided top shelf.
Starter bay includes 2 outer panels and 1 wooden back panel.
Add-on bay includes 1 intermediate panel and 1 wooden back panel.

- For top shelves, see pages 116-130.
- For shelves, see page 138-169.
- For accessories, see page 170-186.

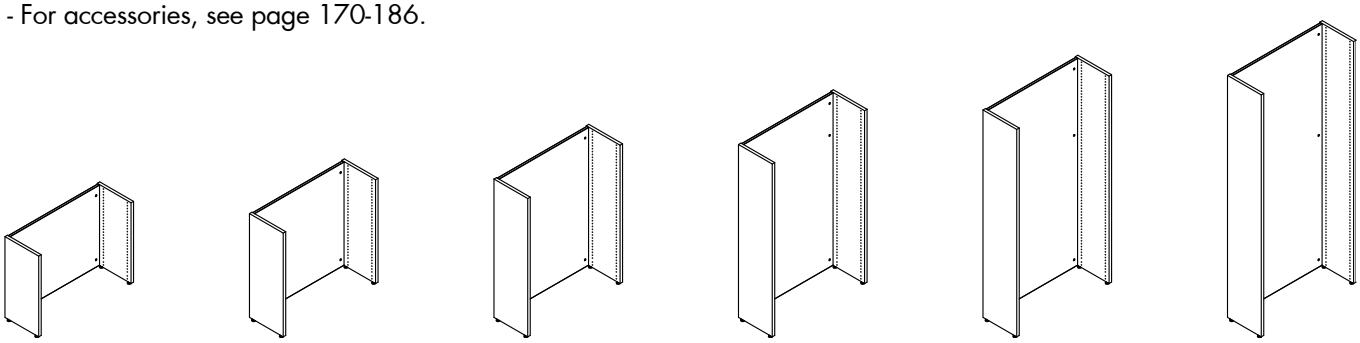

Single-sided starter bay - H720/920/1220/1520/1820/2120 mm

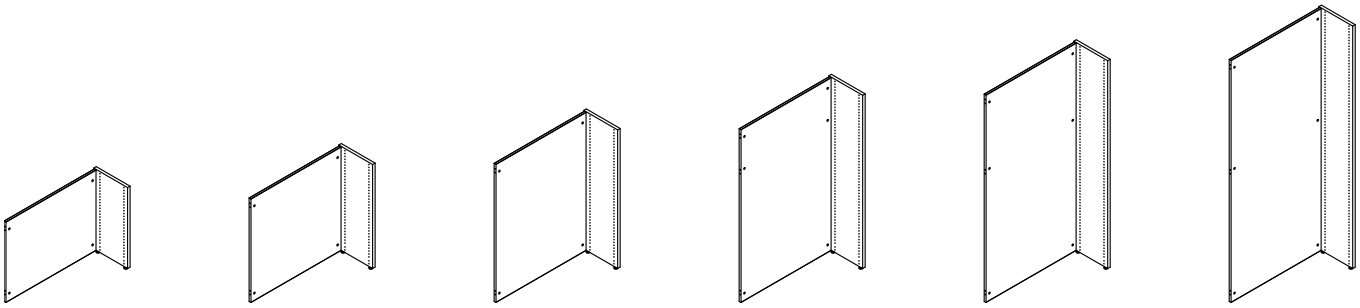

Single-sided add-on bay - H720/920/1220/1520/1820/2120 mm

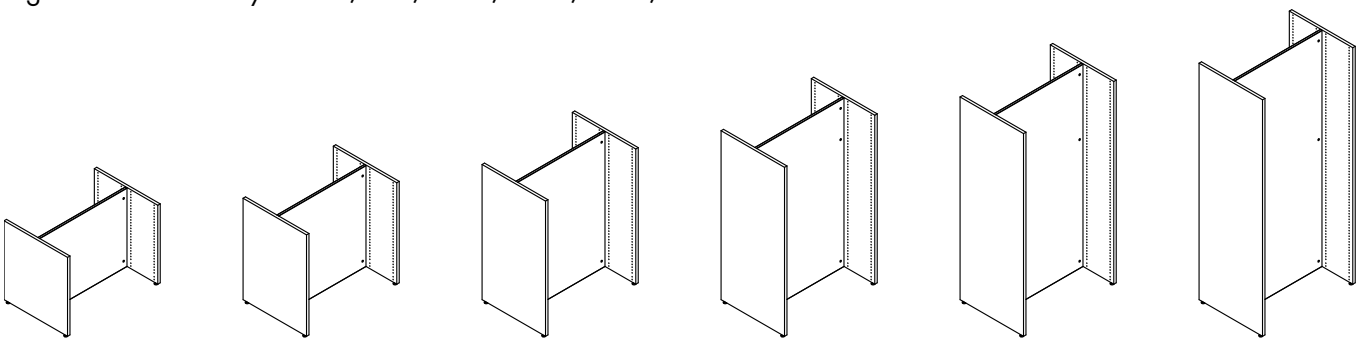

Double-sided starter bay - H720/920/1220/1520/1820/2120 mm

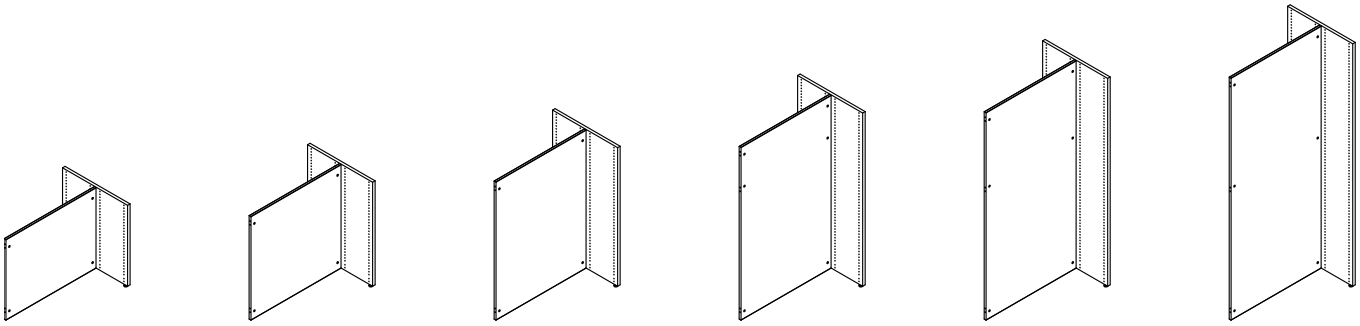

Double-sided add-on bay - H720/920/1220/1520/1820/2120 mm

LINGO SHELVING SYSTEM

SINGLE-SIDED - LOW WOODEN BACK PANEL - ADJUSTABLE FEET - FOR TOP SHELF

Painted and veneered Lingo Shelving Systems are FSC-certified.

H720 mm

Module mm	Shelf depth mm	Item no. Starter bay	Melamine F14000	Painted F14001	Veneer F14002	Item no. Add-on bay	Melamine F14003	Painted F14004	Veneer F14005
500	250	F140xx121020000000	-	-	-	F140xx121020000000	-	-	-
500	300	F140xx131020000000	-	-	-	F140xx131020000000	-	-	-
500	400	F140xx151020000000	-	-	-	F140xx151020000000	-	-	-
750	250	F140xx122020000000	-	-	-	F140xx122020000000	-	-	-
750	300	F140xx132020000000	-	-	-	F140xx132020000000	-	-	-
750	400	F140xx152020000000	-	-	-	F140xx152020000000	-	-	-
900	250	F140xx123020000000	-	-	-	F140xx123020000000	-	-	-
900	300	F140xx133020000000	-	-	-	F140xx133020000000	-	-	-
900	400	F140xx153020000000	-	-	-	F140xx153020000000	-	-	-
1000	250	F140xx124020000000	-	-	-	F140xx124020000000	-	-	-
1000	300	F140xx134020000000	-	-	-	F140xx134020000000	-	-	-
1000	400	F140xx154020000000	-	-	-	F140xx154020000000	-	-	-

H920 mm

Module mm	Shelf depth mm	Item no. Starter bay	Melamine F14000	Painted F14001	Veneer F14002	Item no. Add-on bay	Melamine F14003	Painted F14004	Veneer F14005
500	250	F140xx221020000000	-	-	-	F140xx221020000000	-	-	-
500	300	F140xx231020000000	-	-	-	F140xx231020000000	-	-	-
500	400	F140xx251020000000	-	-	-	F140xx251020000000	-	-	-
750	250	F140xx222020000000	-	-	-	F140xx222020000000	-	-	-
750	300	F140xx232020000000	-	-	-	F140xx232020000000	-	-	-
750	400	F140xx252020000000	-	-	-	F140xx252020000000	-	-	-
900	250	F140xx223020000000	-	-	-	F140xx223020000000	-	-	-
900	300	F140xx233020000000	-	-	-	F140xx233020000000	-	-	-
900	400	F140xx253020000000	-	-	-	F140xx253020000000	-	-	-
1000	250	F140xx224020000000	-	-	-	F140xx224020000000	-	-	-
1000	300	F140xx234020000000	-	-	-	F140xx234020000000	-	-	-
1000	400	F140xx254020000000	-	-	-	F140xx254020000000	-	-	-

H1220 mm

Module mm	Shelf depth mm	Item no. Starter bay	Melamine F14000	Painted F14001	Veneer F14002	Item no. Add-on bay	Melamine F14003	Painted F14004	Veneer F14005
500	250	F140xx321020000000	-	-	-	F140xx321020000000	-	-	-
500	300	F140xx331020000000	-	-	-	F140xx331020000000	-	-	-
500	400	F140xx351020000000	-	-	-	F140xx351020000000	-	-	-
750	250	F140xx322020000000	-	-	-	F140xx322020000000	-	-	-
750	300	F140xx332020000000	-	-	-	F140xx332020000000	-	-	-
750	400	F140xx352020000000	-	-	-	F140xx352020000000	-	-	-
900	250	F140xx323020000000	-	-	-	F140xx323020000000	-	-	-
900	300	F140xx333020000000	-	-	-	F140xx333020000000	-	-	-
900	400	F140xx353020000000	-	-	-	F140xx353020000000	-	-	-
1000	250	F140xx324020000000	-	-	-	F140xx324020000000	-	-	-
1000	300	F140xx334020000000	-	-	-	F140xx334020000000	-	-	-
1000	400	F140xx354020000000	-	-	-	F140xx354020000000	-	-	-

LINGO SHELVING SYSTEM

SINGLE-SIDED - LOW WOODEN BACK PANEL - ADJUSTABLE FEET - FOR TOP SHELF

Painted and veneered Lingo Shelving Systems are FSC-certified.

H1520 mm

Module mm	Shelf depth mm	Item no. Starter bay	Melamine F14000	Painted F14001	Veneer F14002	Item no. Add-on bay	Melamine F14003	Painted F14004	Veneer F14005
500	250	F140xx421020000000	-	-	-	F140xx421020000000	-	-	-
500	300	F140xx431020000000	-	-	-	F140xx431020000000	-	-	-
500	400	F140xx451020000000	-	-	-	F140xx451020000000	-	-	-
750	250	F140xx422020000000	-	-	-	F140xx422020000000	-	-	-
750	300	F140xx432020000000	-	-	-	F140xx432020000000	-	-	-
750	400	F140xx452020000000	-	-	-	F140xx452020000000	-	-	-
900	250	F140xx423020000000	-	-	-	F140xx423020000000	-	-	-
900	300	F140xx433020000000	-	-	-	F140xx433020000000	-	-	-
900	400	F140xx453020000000	-	-	-	F140xx453020000000	-	-	-
1000	250	F140xx424020000000	-	-	-	F140xx424020000000	-	-	-
1000	300	F140xx434020000000	-	-	-	F140xx434020000000	-	-	-
1000	400	F140xx454020000000	-	-	-	F140xx454020000000	-	-	-

H1820 mm

Module mm	Shelf depth mm	Item no. Starter bay	Melamine F14000	Painted F14001	Veneer F14002	Item no. Add-on bay	Melamine F14003	Painted F14004	Veneer F14005
500	250	F140xx521020000000	-	-	-	F140xx521020000000	-	-	-
500	300	F140xx531020000000	-	-	-	F140xx531020000000	-	-	-
500	400	F140xx551020000000	-	-	-	F140xx551020000000	-	-	-
750	250	F140xx522020000000	-	-	-	F140xx522020000000	-	-	-
750	300	F140xx532020000000	-	-	-	F140xx532020000000	-	-	-
750	400	F140xx552020000000	-	-	-	F140xx552020000000	-	-	-
900	250	F140xx523020000000	-	-	-	F140xx523020000000	-	-	-
900	300	F140xx533020000000	-	-	-	F140xx533020000000	-	-	-
900	400	F140xx553020000000	-	-	-	F140xx553020000000	-	-	-
1000	250	F140xx524020000000	-	-	-	F140xx524020000000	-	-	-
1000	300	F140xx534020000000	-	-	-	F140xx534020000000	-	-	-
1000	400	F140xx554020000000	-	-	-	F140xx554020000000	-	-	-

H2120 mm

Module mm	Shelf depth mm	Item no. Starter bay	Melamine F14000	Painted F14001	Veneer F14002	Item no. Add-on bay	Melamine F14003	Painted F14004	Veneer F14005
500	250	F140xx621020000000	-	-	-	F140xx621020000000	-	-	-
500	300	F140xx631020000000	-	-	-	F140xx631020000000	-	-	-
500	400	F140xx651020000000	-	-	-	F140xx651020000000	-	-	-
750	250	F140xx622020000000	-	-	-	F140xx622020000000	-	-	-
750	300	F140xx632020000000	-	-	-	F140xx632020000000	-	-	-
750	400	F140xx652020000000	-	-	-	F140xx652020000000	-	-	-
900	250	F140xx623020000000	-	-	-	F140xx623020000000	-	-	-
900	300	F140xx633020000000	-	-	-	F140xx633020000000	-	-	-
900	400	F140xx653020000000	-	-	-	F140xx653020000000	-	-	-
1000	250	F140xx624020000000	-	-	-	F140xx624020000000	-	-	-
1000	300	F140xx634020000000	-	-	-	F140xx634020000000	-	-	-
1000	400	F140xx654020000000	-	-	-	F140xx654020000000	-	-	-

LINGO SHELVING SYSTEM

DOUBLE-SIDED - LOW WOODEN BACK PANEL - ADJUSTABLE FEET - FOR TOP SHELF

Painted and veneered Lingo Shelving Systems are FSC-certified.

H720 mm

Module mm	Shelf depth mm	Item no. Starter bay	Melamine F14012	Painted F14013	Veneer F14014	Item no. Add-on bay	Melamine F14015	Painted F14016	Veneer F14017
500	250	F140xx121020000000	-	-	-	F140xx121020000000	-	-	-
500	300	F140xx131020000000	-	-	-	F140xx131020000000	-	-	-
500	400	F140xx151020000000	-	-	-	F140xx151020000000	-	-	-
750	250	F140xx122020000000	-	-	-	F140xx122020000000	-	-	-
750	300	F140xx132020000000	-	-	-	F140xx132020000000	-	-	-
750	400	F140xx152020000000	-	-	-	F140xx152020000000	-	-	-
900	250	F140xx123020000000	-	-	-	F140xx123020000000	-	-	-
900	300	F140xx133020000000	-	-	-	F140xx133020000000	-	-	-
900	400	F140xx153020000000	-	-	-	F140xx153020000000	-	-	-
1000	250	F140xx124020000000	-	-	-	F140xx124020000000	-	-	-
1000	300	F140xx134020000000	-	-	-	F140xx134020000000	-	-	-
1000	400	F140xx154020000000	-	-	-	F140xx154020000000	-	-	-

H920 mm

Module mm	Shelf depth mm	Item no. Starter bay	Melamine F14012	Painted F14013	Veneer F14014	Item no. Add-on bay	Melamine F14015	Painted F14016	Veneer F14017
500	250	F140xx221020000000	-	-	-	F140xx221020000000	-	-	-
500	300	F140xx231020000000	-	-	-	F140xx231020000000	-	-	-
500	400	F140xx251020000000	-	-	-	F140xx251020000000	-	-	-
750	250	F140xx222020000000	-	-	-	F140xx222020000000	-	-	-
750	300	F140xx232020000000	-	-	-	F140xx232020000000	-	-	-
750	400	F140xx252020000000	-	-	-	F140xx252020000000	-	-	-
900	250	F140xx223020000000	-	-	-	F140xx223020000000	-	-	-
900	300	F140xx233020000000	-	-	-	F140xx233020000000	-	-	-
900	400	F140xx253020000000	-	-	-	F140xx253020000000	-	-	-
1000	250	F140xx224020000000	-	-	-	F140xx224020000000	-	-	-
1000	300	F140xx234020000000	-	-	-	F140xx234020000000	-	-	-
1000	400	F140xx254020000000	-	-	-	F140xx254020000000	-	-	-

H1220 mm

Module mm	Shelf depth mm	Item no. Starter bay	Melamine F14012	Painted F14013	Veneer F14014	Item no. Add-on bay	Melamine F14015	Painted F14016	Veneer F14017
500	250	F140xx321020000000	-	-	-	F140xx321020000000	-	-	-
500	300	F140xx331020000000	-	-	-	F140xx331020000000	-	-	-
500	400	F140xx351020000000	-	-	-	F140xx351020000000	-	-	-
750	250	F140xx322020000000	-	-	-	F140xx322020000000	-	-	-
750	300	F140xx332020000000	-	-	-	F140xx332020000000	-	-	-
750	400	F140xx352020000000	-	-	-	F140xx352020000000	-	-	-
900	250	F140xx323020000000	-	-	-	F140xx323020000000	-	-	-
900	300	F140xx333020000000	-	-	-	F140xx333020000000	-	-	-
900	400	F140xx353020000000	-	-	-	F140xx353020000000	-	-	-
1000	250	F140xx324020000000	-	-	-	F140xx324020000000	-	-	-
1000	300	F140xx334020000000	-	-	-	F140xx334020000000	-	-	-
1000	400	F140xx354020000000	-	-	-	F140xx354020000000	-	-	-

LINGO SHELVING SYSTEM

DOUBLE-SIDED - LOW WOODEN BACK PANEL - ADJUSTABLE FEET - FOR TOP SHELF

Painted and veneered Lingo Shelving Systems are FSC-certified.

H1520 mm

Module mm	Shelf depth mm	Item no. Starter bay	Melamine F14012	Painted F14013	Veneer F14014	Item no. Add-on bay	Melamine F14015	Painted F14016	Veneer F14017
500	250	F140xx421020000000	-	-	-	F140xx421020000000	-	-	-
500	300	F140xx431020000000	-	-	-	F140xx431020000000	-	-	-
500	400	F140xx451020000000	-	-	-	F140xx451020000000	-	-	-
750	250	F140xx422020000000	-	-	-	F140xx422020000000	-	-	-
750	300	F140xx432020000000	-	-	-	F140xx432020000000	-	-	-
750	400	F140xx452020000000	-	-	-	F140xx452020000000	-	-	-
900	250	F140xx423020000000	-	-	-	F140xx423020000000	-	-	-
900	300	F140xx433020000000	-	-	-	F140xx433020000000	-	-	-
900	400	F140xx453020000000	-	-	-	F140xx453020000000	-	-	-
1000	250	F140xx424020000000	-	-	-	F140xx424020000000	-	-	-
1000	300	F140xx434020000000	-	-	-	F140xx434020000000	-	-	-
1000	400	F140xx454020000000	-	-	-	F140xx454020000000	-	-	-

H1820 mm

Module mm	Shelf depth mm	Item no. Starter bay	Melamine F14012	Painted F14013	Veneer F14014	Item no. Add-on bay	Melamine F14015	Painted F14016	Veneer F14017
500	250	F140xx521020000000	-	-	-	F140xx521020000000	-	-	-
500	300	F140xx531020000000	-	-	-	F140xx531020000000	-	-	-
500	400	F140xx551020000000	-	-	-	F140xx551020000000	-	-	-
750	250	F140xx522020000000	-	-	-	F140xx522020000000	-	-	-
750	300	F140xx532020000000	-	-	-	F140xx532020000000	-	-	-
750	400	F140xx552020000000	-	-	-	F140xx552020000000	-	-	-
900	250	F140xx523020000000	-	-	-	F140xx523020000000	-	-	-
900	300	F140xx533020000000	-	-	-	F140xx533020000000	-	-	-
900	400	F140xx553020000000	-	-	-	F140xx553020000000	-	-	-
1000	250	F140xx524020000000	-	-	-	F140xx524020000000	-	-	-
1000	300	F140xx534020000000	-	-	-	F140xx534020000000	-	-	-
1000	400	F140xx554020000000	-	-	-	F140xx554020000000	-	-	-

H2120 mm

Module mm	Shelf depth mm	Item no. Starter bay	Melamine F14012	Painted F14013	Veneer F14014	Item no. Add-on bay	Melamine F14015	Painted F14016	Veneer F14017
500	250	F140xx621020000000	-	-	-	F140xx621020000000	-	-	-
500	300	F140xx631020000000	-	-	-	F140xx631020000000	-	-	-
500	400	F140xx651020000000	-	-	-	F140xx651020000000	-	-	-
750	250	F140xx622020000000	-	-	-	F140xx622020000000	-	-	-
750	300	F140xx632020000000	-	-	-	F140xx632020000000	-	-	-
750	400	F140xx652020000000	-	-	-	F140xx652020000000	-	-	-
900	250	F140xx623020000000	-	-	-	F140xx623020000000	-	-	-
900	300	F140xx633020000000	-	-	-	F140xx633020000000	-	-	-
900	400	F140xx653020000000	-	-	-	F140xx653020000000	-	-	-
1000	250	F140xx624020000000	-	-	-	F140xx624020000000	-	-	-
1000	300	F140xx634020000000	-	-	-	F140xx634020000000	-	-	-
1000	400	F140xx654020000000	-	-	-	F140xx654020000000	-	-	-

LINGO SHELVING SYSTEM

CROSS BRACE - ADJUSTABLE FEET - FOR TOP SHELF

LINGO SHELVING SYSTEM

CROSS BRACE - ADJUSTABLE FEET - FOR TOP SHELF

F14000/F14001/F14002/F14003/F14004/F14005/F14012/F14013/F14014/F14015/F14016/F14017

Shelving system with wooden panels and cross brace. To be used with top shelf.
Starter bay includes 2 outer panels and 1 cross brace.
Add-on bay includes 1 intermediate panel and 1 cross brace.
Middle shelf must be screwed into panels for bays above H920 mm.

- For top shelves, see pages 116-130.
- For shelves, see page 138-169.
- For accessories, see page 170-186.

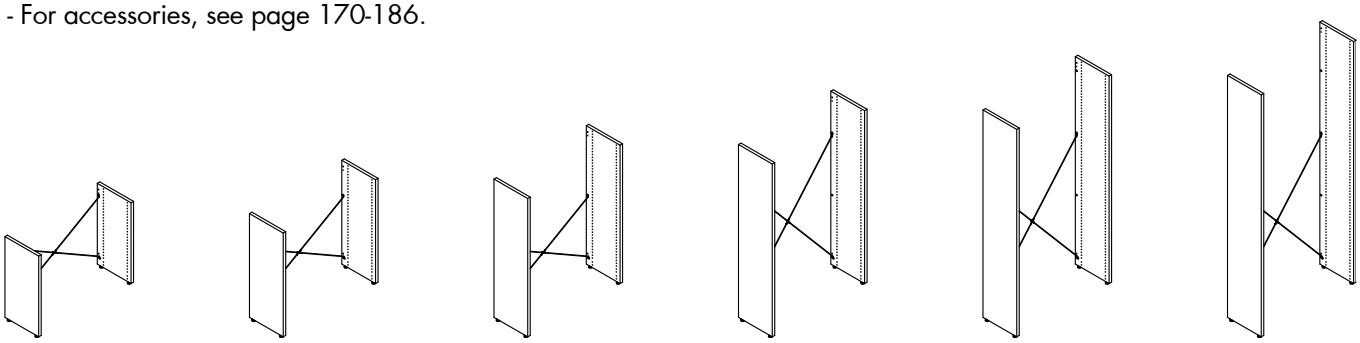

Single-sided starter bay - H720/920/1220/1520/1820/2120 mm

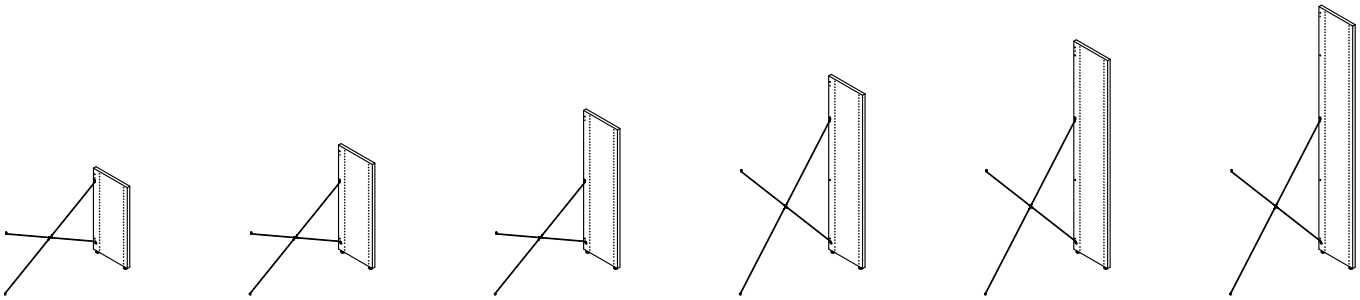

Single-sided add-on bay - H720/920/1220/1520/1820/2120 mm

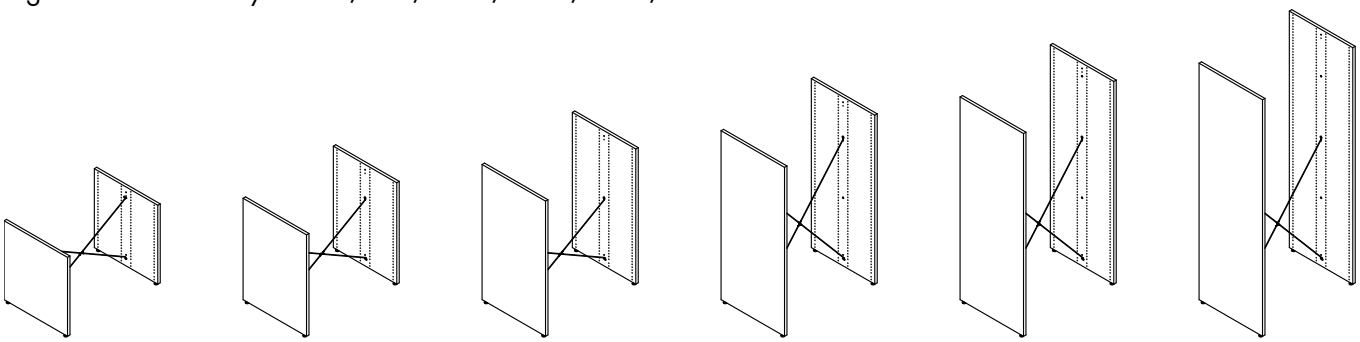

Double-sided starter bay - H720/920/1220/1520/1820/2120 mm

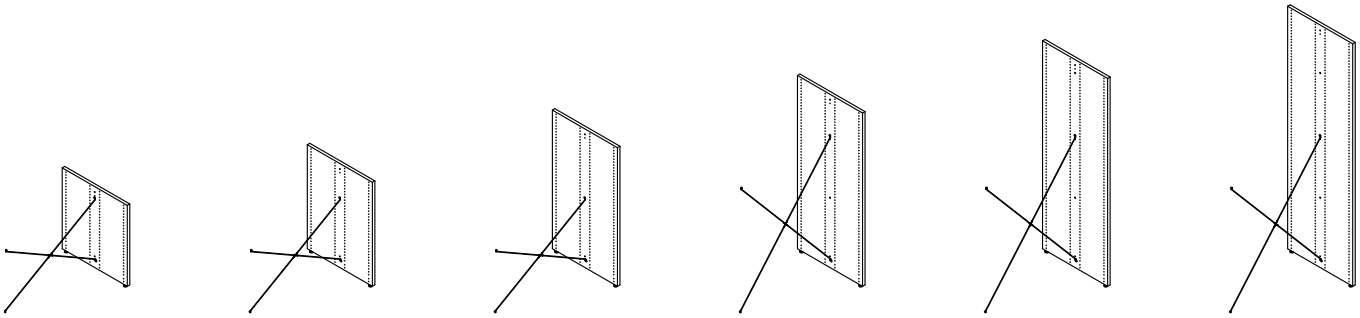

Double-sided add-on bay - H720/920/1220/1520/1820/2120 mm

LINGO SHELVING SYSTEM

SINGLE-SIDED - CROSS BRACE - ADJUSTABLE FEET - FOR TOP SHELF

Painted and veneered Lingo Shelving Systems are FSC-certified.

H720 mm

Module mm	Shelf depth mm	Item no. Starter bay	Melamine F14000	Painted F14001	Veneer F14002	Item no. Add-on bay	Melamine F14003	Painted F14004	Veneer F14005
500	250	F140xx121100000000	-	-	-	F140xx121100000000	-	-	-
500	300	F140xx131100000000	-	-	-	F140xx131100000000	-	-	-
500	400	F140xx151100000000	-	-	-	F140xx151100000000	-	-	-
750	250	F140xx122100000000	-	-	-	F140xx122100000000	-	-	-
750	300	F140xx132100000000	-	-	-	F140xx132100000000	-	-	-
750	400	F140xx152100000000	-	-	-	F140xx152100000000	-	-	-
900	250	F140xx123100000000	-	-	-	F140xx123100000000	-	-	-
900	300	F140xx133100000000	-	-	-	F140xx133100000000	-	-	-
900	400	F140xx153100000000	-	-	-	F140xx153100000000	-	-	-
1000	250	F140xx124100000000	-	-	-	F140xx124100000000	-	-	-
1000	300	F140xx134100000000	-	-	-	F140xx134100000000	-	-	-
1000	400	F140xx154100000000	-	-	-	F140xx154100000000	-	-	-

H920 mm

Module mm	Shelf depth mm	Item no. Starter bay	Melamine F14000	Painted F14001	Veneer F14002	Item no. Add-on bay	Melamine F14003	Painted F14004	Veneer F14005
500	250	F140xx221100000000	-	-	-	F140xx221100000000	-	-	-
500	300	F140xx231100000000	-	-	-	F140xx231100000000	-	-	-
500	400	F140xx251100000000	-	-	-	F140xx251100000000	-	-	-
750	250	F140xx222100000000	-	-	-	F140xx222100000000	-	-	-
750	300	F140xx232100000000	-	-	-	F140xx232100000000	-	-	-
750	400	F140xx252100000000	-	-	-	F140xx252100000000	-	-	-
900	250	F140xx223100000000	-	-	-	F140xx223100000000	-	-	-
900	300	F140xx233100000000	-	-	-	F140xx233100000000	-	-	-
900	400	F140xx253100000000	-	-	-	F140xx253100000000	-	-	-
1000	250	F140xx224100000000	-	-	-	F140xx224100000000	-	-	-
1000	300	F140xx234100000000	-	-	-	F140xx234100000000	-	-	-
1000	400	F140xx254100000000	-	-	-	F140xx254100000000	-	-	-

H1220 mm

Module mm	Shelf depth mm	Item no. Starter bay	Melamine F14000	Painted F14001	Veneer F14002	Item no. Add-on bay	Melamine F14003	Painted F14004	Veneer F14005
500	250	F140xx321100000000	-	-	-	F140xx321100000000	-	-	-
500	300	F140xx331100000000	-	-	-	F140xx331100000000	-	-	-
500	400	F140xx351100000000	-	-	-	F140xx351100000000	-	-	-
750	250	F140xx322100000000	-	-	-	F140xx322100000000	-	-	-
750	300	F140xx332100000000	-	-	-	F140xx332100000000	-	-	-
750	400	F140xx352100000000	-	-	-	F140xx352100000000	-	-	-
900	250	F140xx323100000000	-	-	-	F140xx323100000000	-	-	-
900	300	F140xx333100000000	-	-	-	F140xx333100000000	-	-	-
900	400	F140xx353100000000	-	-	-	F140xx353100000000	-	-	-
1000	250	F140xx324100000000	-	-	-	F140xx324100000000	-	-	-
1000	300	F140xx334100000000	-	-	-	F140xx334100000000	-	-	-
1000	400	F140xx354100000000	-	-	-	F140xx354100000000	-	-	-

LINGO SHELVING SYSTEM

SINGLE-SIDED - CROSS BRACE - ADJUSTABLE FEET - FOR TOP SHELF

Painted and veneered Lingo Shelving Systems are FSC-certified.

H1520 mm

Module mm	Shelf depth mm	Item no. Starter bay	Melamine F14000	Painted F14001	Veneer F14002	Item no. Add-on bay	Melamine F14003	Painted F14004	Veneer F14005
500	250	F140xx421100000000	-	-	-	F140xx421100000000	-	-	-
500	300	F140xx431100000000	-	-	-	F140xx431100000000	-	-	-
500	400	F140xx451100000000	-	-	-	F140xx451100000000	-	-	-
750	250	F140xx422100000000	-	-	-	F140xx422100000000	-	-	-
750	300	F140xx432100000000	-	-	-	F140xx432100000000	-	-	-
750	400	F140xx452100000000	-	-	-	F140xx452100000000	-	-	-
900	250	F140xx423100000000	-	-	-	F140xx423100000000	-	-	-
900	300	F140xx433100000000	-	-	-	F140xx433100000000	-	-	-
900	400	F140xx453100000000	-	-	-	F140xx453100000000	-	-	-
1000	250	F140xx424100000000	-	-	-	F140xx424100000000	-	-	-
1000	300	F140xx434100000000	-	-	-	F140xx434100000000	-	-	-
1000	400	F140xx454100000000	-	-	-	F140xx454100000000	-	-	-

H1820 mm

Module mm	Shelf depth mm	Item no. Starter bay	Melamine F14000	Painted F14001	Veneer F14002	Item no. Add-on bay	Melamine F14003	Painted F14004	Veneer F14005
500	250	F140xx521100000000	-	-	-	F140xx521100000000	-	-	-
500	300	F140xx531100000000	-	-	-	F140xx531100000000	-	-	-
500	400	F140xx551100000000	-	-	-	F140xx551100000000	-	-	-
750	250	F140xx522100000000	-	-	-	F140xx522100000000	-	-	-
750	300	F140xx532100000000	-	-	-	F140xx532100000000	-	-	-
750	400	F140xx552100000000	-	-	-	F140xx552100000000	-	-	-
900	250	F140xx523100000000	-	-	-	F140xx523100000000	-	-	-
900	300	F140xx533100000000	-	-	-	F140xx533100000000	-	-	-
900	400	F140xx553100000000	-	-	-	F140xx553100000000	-	-	-
1000	250	F140xx524100000000	-	-	-	F140xx524100000000	-	-	-
1000	300	F140xx534100000000	-	-	-	F140xx534100000000	-	-	-
1000	400	F140xx554100000000	-	-	-	F140xx554100000000	-	-	-

H2120 mm

Module mm	Shelf depth mm	Item no. Starter bay	Melamine F14000	Painted F14001	Veneer F14002	Item no. Add-on bay	Melamine F14003	Painted F14004	Veneer F14005
500	250	F140xx621100000000	-	-	-	F140xx621100000000	-	-	-
500	300	F140xx631100000000	-	-	-	F140xx631100000000	-	-	-
500	400	F140xx651100000000	-	-	-	F140xx651100000000	-	-	-
750	250	F140xx622100000000	-	-	-	F140xx622100000000	-	-	-
750	300	F140xx632100000000	-	-	-	F140xx632100000000	-	-	-
750	400	F140xx652100000000	-	-	-	F140xx652100000000	-	-	-
900	250	F140xx623100000000	-	-	-	F140xx623100000000	-	-	-
900	300	F140xx633100000000	-	-	-	F140xx633100000000	-	-	-
900	400	F140xx653100000000	-	-	-	F140xx653100000000	-	-	-
1000	250	F140xx624100000000	-	-	-	F140xx624100000000	-	-	-
1000	300	F140xx634100000000	-	-	-	F140xx634100000000	-	-	-
1000	400	F140xx654100000000	-	-	-	F140xx654100000000	-	-	-

LINGO SHELVING SYSTEM

DOUBLE-SIDED - CROSS BRACE - ADJUSTABLE FEET - FOR TOP SHELF

Painted and veneered Lingo Shelving Systems are FSC-certified.

H720 mm

Module mm	Shelf depth mm	Item no. Starter bay	Melamine F14012	Painted F14013	Veneer F14014	Item no. Add-on bay	Melamine F14015	Painted F14016	Veneer F14017
500	250	F140xx121100000000	-	-	-	F140xx121100000000	-	-	-
500	300	F140xx131100000000	-	-	-	F140xx131100000000	-	-	-
500	400	F140xx151100000000	-	-	-	F140xx151100000000	-	-	-
750	250	F140xx122100000000	-	-	-	F140xx122100000000	-	-	-
750	300	F140xx132100000000	-	-	-	F140xx132100000000	-	-	-
750	400	F140xx152100000000	-	-	-	F140xx152100000000	-	-	-
900	250	F140xx123100000000	-	-	-	F140xx123100000000	-	-	-
900	300	F140xx133100000000	-	-	-	F140xx133100000000	-	-	-
900	400	F140xx153100000000	-	-	-	F140xx153100000000	-	-	-
1000	250	F140xx124100000000	-	-	-	F140xx124100000000	-	-	-
1000	300	F140xx134100000000	-	-	-	F140xx134100000000	-	-	-
1000	400	F140xx154100000000	-	-	-	F140xx154100000000	-	-	-

H920 mm

Module mm	Shelf depth mm	Item no. Starter bay	Melamine F14012	Painted F14013	Veneer F14014	Item no. Add-on bay	Melamine F14015	Painted F14016	Veneer F14017
500	250	F140xx221100000000	-	-	-	F140xx221100000000	-	-	-
500	300	F140xx231100000000	-	-	-	F140xx231100000000	-	-	-
500	400	F140xx251100000000	-	-	-	F140xx251100000000	-	-	-
750	250	F140xx222100000000	-	-	-	F140xx222100000000	-	-	-
750	300	F140xx232100000000	-	-	-	F140xx232100000000	-	-	-
750	400	F140xx252100000000	-	-	-	F140xx252100000000	-	-	-
900	250	F140xx223100000000	-	-	-	F140xx223100000000	-	-	-
900	300	F140xx233100000000	-	-	-	F140xx233100000000	-	-	-
900	400	F140xx253100000000	-	-	-	F140xx253100000000	-	-	-
1000	250	F140xx224100000000	-	-	-	F140xx224100000000	-	-	-
1000	300	F140xx234100000000	-	-	-	F140xx234100000000	-	-	-
1000	400	F140xx254100000000	-	-	-	F140xx254100000000	-	-	-

H1220 mm

Module mm	Shelf depth mm	Item no. Starter bay	Melamine F14012	Painted F14013	Veneer F14014	Item no. Add-on bay	Melamine F14015	Painted F14016	Veneer F14017
500	250	F140xx321100000000	-	-	-	F140xx321100000000	-	-	-
500	300	F140xx331100000000	-	-	-	F140xx331100000000	-	-	-
500	400	F140xx351100000000	-	-	-	F140xx351100000000	-	-	-
750	250	F140xx322100000000	-	-	-	F140xx322100000000	-	-	-
750	300	F140xx332100000000	-	-	-	F140xx332100000000	-	-	-
750	400	F140xx352100000000	-	-	-	F140xx352100000000	-	-	-
900	250	F140xx323100000000	-	-	-	F140xx323100000000	-	-	-
900	300	F140xx333100000000	-	-	-	F140xx333100000000	-	-	-
900	400	F140xx353100000000	-	-	-	F140xx353100000000	-	-	-
1000	250	F140xx324100000000	-	-	-	F140xx324100000000	-	-	-
1000	300	F140xx334100000000	-	-	-	F140xx334100000000	-	-	-
1000	400	F140xx354100000000	-	-	-	F140xx354100000000	-	-	-

LINGO SHELVING SYSTEM

DOUBLE-SIDED - CROSS BRACE - ADJUSTABLE FEET - FOR TOP SHELF

Painted and veneered Lingo Shelving Systems are FSC-certified.

H1520 mm

Module mm	Shelf depth mm	Item no. Starter bay	Melamine F14012	Painted F14013	Veneer F14014	Item no. Add-on bay	Melamine F14015	Painted F14016	Veneer F14017
500	250	F140xx421100000000	-	-	-	F140xx421100000000	-	-	-
500	300	F140xx431100000000	-	-	-	F140xx431100000000	-	-	-
500	400	F140xx451100000000	-	-	-	F140xx451100000000	-	-	-
750	250	F140xx422100000000	-	-	-	F140xx422100000000	-	-	-
750	300	F140xx432100000000	-	-	-	F140xx432100000000	-	-	-
750	400	F140xx452100000000	-	-	-	F140xx452100000000	-	-	-
900	250	F140xx423100000000	-	-	-	F140xx423100000000	-	-	-
900	300	F140xx433100000000	-	-	-	F140xx433100000000	-	-	-
900	400	F140xx453100000000	-	-	-	F140xx453100000000	-	-	-
1000	250	F140xx424100000000	-	-	-	F140xx424100000000	-	-	-
1000	300	F140xx434100000000	-	-	-	F140xx434100000000	-	-	-
1000	400	F140xx454100000000	-	-	-	F140xx454100000000	-	-	-

H1820 mm

Module mm	Shelf depth mm	Item no. Starter bay	Melamine F14012	Painted F14013	Veneer F14014	Item no. Add-on bay	Melamine F14015	Painted F14016	Veneer F14017
500	250	F140xx521100000000	-	-	-	F140xx521100000000	-	-	-
500	300	F140xx531100000000	-	-	-	F140xx531100000000	-	-	-
500	400	F140xx551100000000	-	-	-	F140xx551100000000	-	-	-
750	250	F140xx522100000000	-	-	-	F140xx522100000000	-	-	-
750	300	F140xx532100000000	-	-	-	F140xx532100000000	-	-	-
750	400	F140xx552100000000	-	-	-	F140xx552100000000	-	-	-
900	250	F140xx523100000000	-	-	-	F140xx523100000000	-	-	-
900	300	F140xx533100000000	-	-	-	F140xx533100000000	-	-	-
900	400	F140xx553100000000	-	-	-	F140xx553100000000	-	-	-
1000	250	F140xx524100000000	-	-	-	F140xx524100000000	-	-	-
1000	300	F140xx534100000000	-	-	-	F140xx534100000000	-	-	-
1000	400	F140xx554100000000	-	-	-	F140xx554100000000	-	-	-

H2120 mm

Module mm	Shelf depth mm	Item no. Starter bay	Melamine F14012	Painted F14013	Veneer F14014	Item no. Add-on bay	Melamine F14015	Painted F14016	Veneer F14017
500	250	F140xx621100000000	-	-	-	F140xx621100000000	-	-	-
500	300	F140xx631100000000	-	-	-	F140xx631100000000	-	-	-
500	400	F140xx651100000000	-	-	-	F140xx651100000000	-	-	-
750	250	F140xx622100000000	-	-	-	F140xx622100000000	-	-	-
750	300	F140xx632100000000	-	-	-	F140xx632100000000	-	-	-
750	400	F140xx652100000000	-	-	-	F140xx652100000000	-	-	-
900	250	F140xx623100000000	-	-	-	F140xx623100000000	-	-	-
900	300	F140xx633100000000	-	-	-	F140xx633100000000	-	-	-
900	400	F140xx653100000000	-	-	-	F140xx653100000000	-	-	-
1000	250	F140xx624100000000	-	-	-	F140xx624100000000	-	-	-
1000	300	F140xx634100000000	-	-	-	F140xx634100000000	-	-	-
1000	400	F140xx654100000000	-	-	-	F140xx654100000000	-	-	-

LINGO SHELVING SYSTEM

STEEL BACK FRAME - ADJUSTABLE FEET - FOR OVERLAYING WOODEN TOP PLATE

LINGO SHELVING SYSTEM

STEEL BACK FRAME - ADJUSTABLE FEET - FOR OVERLAYING WOODEN TOP PLATE
F14100/F14101/F14102/F14103/F14104/F14105/F14112/F14113/F14114/F14115/F14116/F14117

Shelving system with wooden panels and steel back frame. To be used with overlaying wooden top plate.
Starter bay includes 2 outer panels and 1 steel back frame.
Add-on bay includes 1 intermediate panel and 1 steel back frame.

- For overlaying top plate, see pages 131-137.
- For shelves, see page 138-169.
- For accessories, see page 170-186.

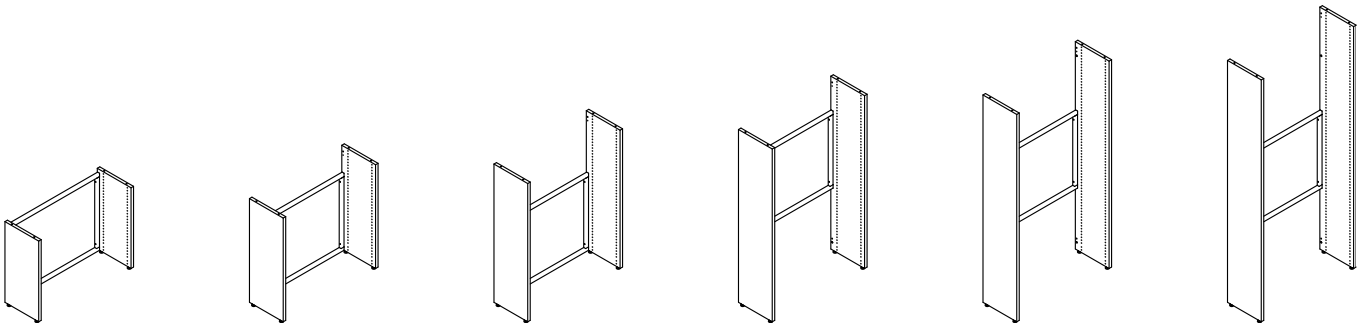

Single-sided starter bay - H720/920/1220/1520/1820/2120 mm

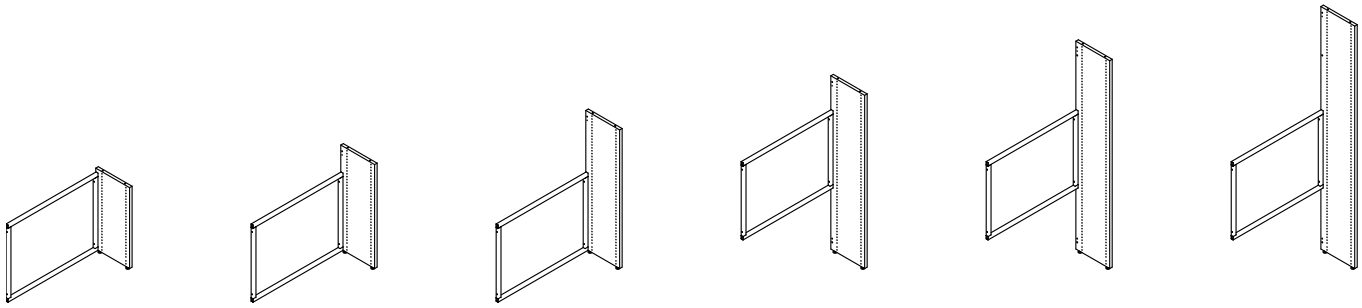

Single-sided add-on bay - H720/920/1220/1520/1820/2120 mm

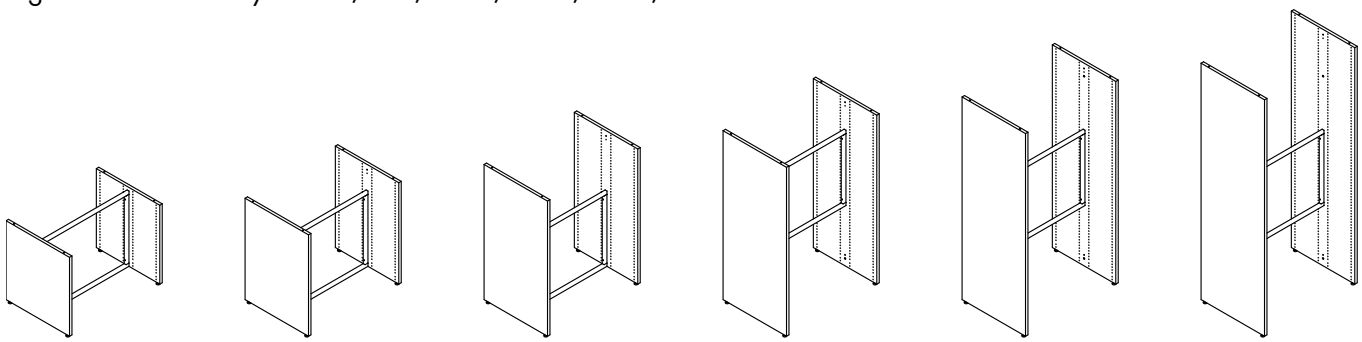

Double-sided starter bay - H720/920/1220/1520/1820/2120 mm

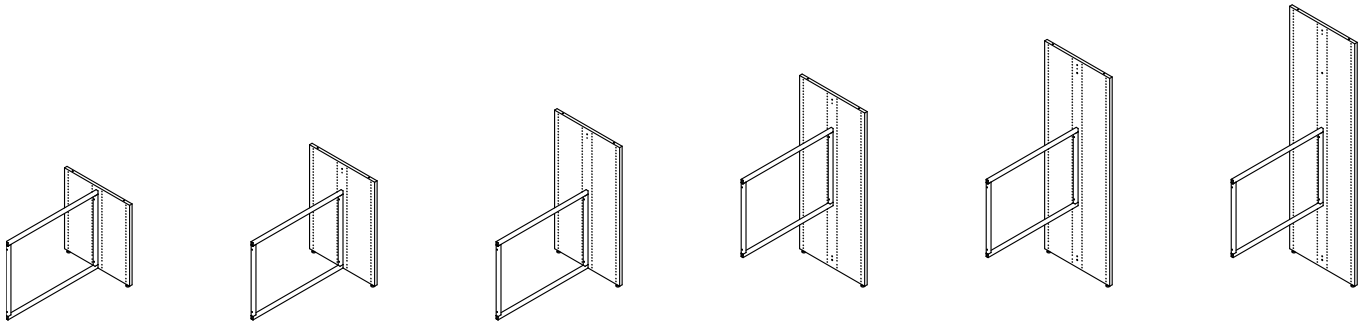

Double-sided add-on bay - H720/920/1220/1520/1820/2120 mm

LINGO SHELVING SYSTEM

SINGLE-SIDED - STEEL BACK FRAME - ADJUSTABLE FEET - FOR OVERLAYING WOODEN TOP PLATE

Painted and veneered Lingo Shelving Systems are FSC-certified.

H720 mm

Module mm	Shelf depth mm	Item no. Starter bay	Melamine F14100	Painted F14101	Veneer F14102	Item no. Add-on bay	Melamine F14103	Painted F14104	Veneer F14105
500	250	F141xx121040000000	-	-	-	F141xx121040000000	-	-	-
500	300	F141xx131040000000	-	-	-	F141xx131040000000	-	-	-
500	400	F141xx151040000000	-	-	-	F141xx151040000000	-	-	-
750	250	F141xx122040000000	-	-	-	F141xx122040000000	-	-	-
750	300	F141xx132040000000	-	-	-	F141xx132040000000	-	-	-
750	400	F141xx152040000000	-	-	-	F141xx152040000000	-	-	-
900	250	F141xx123040000000	-	-	-	F141xx123040000000	-	-	-
900	300	F141xx133040000000	-	-	-	F141xx133040000000	-	-	-
900	400	F141xx153040000000	-	-	-	F141xx153040000000	-	-	-
1000	250	F141xx124040000000	-	-	-	F141xx124040000000	-	-	-
1000	300	F141xx134040000000	-	-	-	F141xx134040000000	-	-	-
1000	400	F141xx154040000000	-	-	-	F141xx154040000000	-	-	-

H920 mm

Module mm	Shelf depth mm	Item no. Starter bay	Melamine F14100	Painted F14101	Veneer F14102	Item no. Add-on bay	Melamine F14103	Painted F14104	Veneer F14105
500	250	F141xx221040000000	-	-	-	F141xx221040000000	-	-	-
500	300	F141xx231040000000	-	-	-	F141xx231040000000	-	-	-
500	400	F141xx251040000000	-	-	-	F141xx251040000000	-	-	-
750	250	F141xx222040000000	-	-	-	F141xx222040000000	-	-	-
750	300	F141xx232040000000	-	-	-	F141xx232040000000	-	-	-
750	400	F141xx252040000000	-	-	-	F141xx252040000000	-	-	-
900	250	F141xx223040000000	-	-	-	F141xx223040000000	-	-	-
900	300	F141xx233040000000	-	-	-	F141xx233040000000	-	-	-
900	400	F141xx253040000000	-	-	-	F141xx253040000000	-	-	-
1000	250	F141xx224040000000	-	-	-	F141xx224040000000	-	-	-
1000	300	F141xx234040000000	-	-	-	F141xx234040000000	-	-	-
1000	400	F141xx254040000000	-	-	-	F141xx254040000000	-	-	-

H1220 mm

Module mm	Shelf depth mm	Item no. Starter bay	Melamine F14100	Painted F14101	Veneer F14102	Item no. Add-on bay	Melamine F14103	Painted F14104	Veneer F14105
500	250	F141xx321040000000	-	-	-	F141xx321040000000	-	-	-
500	300	F141xx331040000000	-	-	-	F141xx331040000000	-	-	-
500	400	F141xx351040000000	-	-	-	F141xx351040000000	-	-	-
750	250	F141xx322040000000	-	-	-	F141xx322040000000	-	-	-
750	300	F141xx332040000000	-	-	-	F141xx332040000000	-	-	-
750	400	F141xx352040000000	-	-	-	F141xx352040000000	-	-	-
900	250	F141xx323040000000	-	-	-	F141xx323040000000	-	-	-
900	300	F141xx333040000000	-	-	-	F141xx333040000000	-	-	-
900	400	F141xx353040000000	-	-	-	F141xx353040000000	-	-	-
1000	250	F141xx324040000000	-	-	-	F141xx324040000000	-	-	-
1000	300	F141xx334040000000	-	-	-	F141xx334040000000	-	-	-
1000	400	F141xx354040000000	-	-	-	F141xx354040000000	-	-	-

LINGO SHELVING SYSTEM

SINGLE-SIDED - STEEL BACK FRAME - ADJUSTABLE FEET - FOR OVERLAYING WOODEN TOP PLATE

Painted and veneered Lingo Shelving Systems are FSC-certified.

H1520 mm

Module mm	Shelf depth mm	Item no. Starter bay	Melamine F14100	Painted F14101	Veneer F14102	Item no. Add-on bay	Melamine F14103	Painted F14104	Veneer F14105
500	250	F141xx421040000000	-	-	-	F141xx421040000000	-	-	-
500	300	F141xx431040000000	-	-	-	F141xx431040000000	-	-	-
500	400	F141xx451040000000	-	-	-	F141xx451040000000	-	-	-
750	250	F141xx422040000000	-	-	-	F141xx422040000000	-	-	-
750	300	F141xx432040000000	-	-	-	F141xx432040000000	-	-	-
750	400	F141xx452040000000	-	-	-	F141xx452040000000	-	-	-
900	250	F141xx423040000000	-	-	-	F141xx423040000000	-	-	-
900	300	F141xx433040000000	-	-	-	F141xx433040000000	-	-	-
900	400	F141xx453040000000	-	-	-	F141xx453040000000	-	-	-
1000	250	F141xx424040000000	-	-	-	F141xx424040000000	-	-	-
1000	300	F141xx434040000000	-	-	-	F141xx434040000000	-	-	-
1000	400	F141xx454040000000	-	-	-	F141xx454040000000	-	-	-

H1820 mm

Module mm	Shelf depth mm	Item no. Starter bay	Melamine F14100	Painted F14101	Veneer F14102	Item no. Add-on bay	Melamine F14103	Painted F14104	Veneer F14105
500	250	F141xx521040000000	-	-	-	F141xx521040000000	-	-	-
500	300	F141xx531040000000	-	-	-	F141xx531040000000	-	-	-
500	400	F141xx551040000000	-	-	-	F141xx551040000000	-	-	-
750	250	F141xx522040000000	-	-	-	F141xx522040000000	-	-	-
750	300	F141xx532040000000	-	-	-	F141xx532040000000	-	-	-
750	400	F141xx552040000000	-	-	-	F141xx552040000000	-	-	-
900	250	F141xx523040000000	-	-	-	F141xx523040000000	-	-	-
900	300	F141xx533040000000	-	-	-	F141xx533040000000	-	-	-
900	400	F141xx553040000000	-	-	-	F141xx553040000000	-	-	-
1000	250	F141xx524040000000	-	-	-	F141xx524040000000	-	-	-
1000	300	F141xx534040000000	-	-	-	F141xx534040000000	-	-	-
1000	400	F141xx554040000000	-	-	-	F141xx554040000000	-	-	-

H2120 mm

Module mm	Shelf depth mm	Item no. Starter bay	Melamine F14100	Painted F14101	Veneer F14102	Item no. Add-on bay	Melamine F14103	Painted F14104	Veneer F14105
500	250	F141xx621040000000	-	-	-	F141xx621040000000	-	-	-
500	300	F141xx631040000000	-	-	-	F141xx631040000000	-	-	-
500	400	F141xx651040000000	-	-	-	F141xx651040000000	-	-	-
750	250	F141xx622040000000	-	-	-	F141xx622040000000	-	-	-
750	300	F141xx632040000000	-	-	-	F141xx632040000000	-	-	-
750	400	F141xx652040000000	-	-	-	F141xx652040000000	-	-	-
900	250	F141xx623040000000	-	-	-	F141xx623040000000	-	-	-
900	300	F141xx633040000000	-	-	-	F141xx633040000000	-	-	-
900	400	F141xx653040000000	-	-	-	F141xx653040000000	-	-	-
1000	250	F141xx624040000000	-	-	-	F141xx624040000000	-	-	-
1000	300	F141xx634040000000	-	-	-	F141xx634040000000	-	-	-
1000	400	F141xx654040000000	-	-	-	F141xx654040000000	-	-	-

LINGO SHELVING SYSTEM

DOUBLE-SIDED - STEEL BACK FRAME - ADJUSTABLE FEET - FOR OVERLAYING WOODEN TOP PLATE

Painted and veneered Lingo Shelving Systems are FSC-certified.

H720 mm

Module mm	Shelf depth mm	Item no. Starter bay	Melamine F14112	Painted F14113	Veneer F14114	Item no. Add-on bay	Melamine F14115	Painted F14116	Veneer F14117
500	250	F141xx121040000000	-	-	-	F141xx121040000000	-	-	-
500	300	F141xx131040000000	-	-	-	F141xx131040000000	-	-	-
500	400	F141xx151040000000	-	-	-	F141xx151040000000	-	-	-
750	250	F141xx122040000000	-	-	-	F141xx122040000000	-	-	-
750	300	F141xx132040000000	-	-	-	F141xx132040000000	-	-	-
750	400	F141xx152040000000	-	-	-	F141xx152040000000	-	-	-
900	250	F141xx123040000000	-	-	-	F141xx123040000000	-	-	-
900	300	F141xx133040000000	-	-	-	F141xx133040000000	-	-	-
900	400	F141xx153040000000	-	-	-	F141xx153040000000	-	-	-
1000	250	F141xx124040000000	-	-	-	F141xx124040000000	-	-	-
1000	300	F141xx134040000000	-	-	-	F141xx134040000000	-	-	-
1000	400	F141xx154040000000	-	-	-	F141xx154040000000	-	-	-

H920 mm

Module mm	Shelf depth mm	Item no. Starter bay	Melamine F14112	Painted F14113	Veneer F14114	Item no. Add-on bay	Melamine F14115	Painted F14116	Veneer F14117
500	250	F141xx221040000000	-	-	-	F141xx221040000000	-	-	-
500	300	F141xx231040000000	-	-	-	F141xx231040000000	-	-	-
500	400	F141xx251040000000	-	-	-	F141xx251040000000	-	-	-
750	250	F141xx222040000000	-	-	-	F141xx222040000000	-	-	-
750	300	F141xx232040000000	-	-	-	F141xx232040000000	-	-	-
750	400	F141xx252040000000	-	-	-	F141xx252040000000	-	-	-
900	250	F141xx223040000000	-	-	-	F141xx223040000000	-	-	-
900	300	F141xx233040000000	-	-	-	F141xx233040000000	-	-	-
900	400	F141xx253040000000	-	-	-	F141xx253040000000	-	-	-
1000	250	F141xx224040000000	-	-	-	F141xx224040000000	-	-	-
1000	300	F141xx234040000000	-	-	-	F141xx234040000000	-	-	-
1000	400	F141xx254040000000	-	-	-	F141xx254040000000	-	-	-

H1220 mm

Module mm	Shelf depth mm	Item no. Starter bay	Melamine F14112	Painted F14113	Veneer F14114	Item no. Add-on bay	Melamine F14115	Painted F14116	Veneer F14117
500	250	F141xx321040000000	-	-	-	F141xx321040000000	-	-	-
500	300	F141xx331040000000	-	-	-	F141xx331040000000	-	-	-
500	400	F141xx351040000000	-	-	-	F141xx351040000000	-	-	-
750	250	F141xx322040000000	-	-	-	F141xx322040000000	-	-	-
750	300	F141xx332040000000	-	-	-	F141xx332040000000	-	-	-
750	400	F141xx352040000000	-	-	-	F141xx352040000000	-	-	-
900	250	F141xx323040000000	-	-	-	F141xx323040000000	-	-	-
900	300	F141xx333040000000	-	-	-	F141xx333040000000	-	-	-
900	400	F141xx353040000000	-	-	-	F141xx353040000000	-	-	-
1000	250	F141xx324040000000	-	-	-	F141xx324040000000	-	-	-
1000	300	F141xx334040000000	-	-	-	F141xx334040000000	-	-	-
1000	400	F141xx354040000000	-	-	-	F141xx354040000000	-	-	-

LINGO SHELVING SYSTEM

DOUBLE-SIDED - STEEL BACK FRAME - ADJUSTABLE FEET - FOR OVERLAYING WOODEN TOP PLATE

Painted and veneered Lingo Shelving Systems are FSC-certified.

H1520 mm

Module mm	Shelf depth mm	Item no. Starter bay	Melamine F14112	Painted F14113	Veneer F14114	Item no. Add-on bay	Melamine F14115	Painted F14116	Veneer F14117
500	250	F141xx421040000000	-	-	-	F141xx421040000000	-	-	-
500	300	F141xx431040000000	-	-	-	F141xx431040000000	-	-	-
500	400	F141xx451040000000	-	-	-	F141xx451040000000	-	-	-
750	250	F141xx422040000000	-	-	-	F141xx422040000000	-	-	-
750	300	F141xx432040000000	-	-	-	F141xx432040000000	-	-	-
750	400	F141xx452040000000	-	-	-	F141xx452040000000	-	-	-
900	250	F141xx423040000000	-	-	-	F141xx423040000000	-	-	-
900	300	F141xx433040000000	-	-	-	F141xx433040000000	-	-	-
900	400	F141xx453040000000	-	-	-	F141xx453040000000	-	-	-
1000	250	F141xx424040000000	-	-	-	F141xx424040000000	-	-	-
1000	300	F141xx434040000000	-	-	-	F141xx434040000000	-	-	-
1000	400	F141xx454040000000	-	-	-	F141xx454040000000	-	-	-

H1820 mm

Module mm	Shelf depth mm	Item no. Starter bay	Melamine F14112	Painted F14113	Veneer F14114	Item no. Add-on bay	Melamine F14115	Painted F14116	Veneer F14117
500	250	F141xx521040000000	-	-	-	F141xx521040000000	-	-	-
500	300	F141xx531040000000	-	-	-	F141xx531040000000	-	-	-
500	400	F141xx551040000000	-	-	-	F141xx551040000000	-	-	-
750	250	F141xx522040000000	-	-	-	F141xx522040000000	-	-	-
750	300	F141xx532040000000	-	-	-	F141xx532040000000	-	-	-
750	400	F141xx552040000000	-	-	-	F141xx552040000000	-	-	-
900	250	F141xx523040000000	-	-	-	F141xx523040000000	-	-	-
900	300	F141xx533040000000	-	-	-	F141xx533040000000	-	-	-
900	400	F141xx553040000000	-	-	-	F141xx553040000000	-	-	-
1000	250	F141xx524040000000	-	-	-	F141xx524040000000	-	-	-
1000	300	F141xx534040000000	-	-	-	F141xx534040000000	-	-	-
1000	400	F141xx554040000000	-	-	-	F141xx554040000000	-	-	-

H2120 mm

Module mm	Shelf depth mm	Item no. Starter bay	Melamine F14112	Painted F14113	Veneer F14114	Item no. Add-on bay	Melamine F14115	Painted F14116	Veneer F14117
500	250	F141xx621040000000	-	-	-	F141xx621040000000	-	-	-
500	300	F141xx631040000000	-	-	-	F141xx631040000000	-	-	-
500	400	F141xx651040000000	-	-	-	F141xx651040000000	-	-	-
750	250	F141xx622040000000	-	-	-	F141xx622040000000	-	-	-
750	300	F141xx632040000000	-	-	-	F141xx632040000000	-	-	-
750	400	F141xx652040000000	-	-	-	F141xx652040000000	-	-	-
900	250	F141xx623040000000	-	-	-	F141xx623040000000	-	-	-
900	300	F141xx633040000000	-	-	-	F141xx633040000000	-	-	-
900	400	F141xx653040000000	-	-	-	F141xx653040000000	-	-	-
1000	250	F141xx624040000000	-	-	-	F141xx624040000000	-	-	-
1000	300	F141xx634040000000	-	-	-	F141xx634040000000	-	-	-
1000	400	F141xx654040000000	-	-	-	F141xx654040000000	-	-	-

LINGO SHELVING SYSTEM

WOODEN BACK PANEL - ADJUSTABLE FEET - FOR OVERLAYING WOODEN TOP PLATE

LINGO SHELVING SYSTEM

WOODEN BACK PANEL - ADJUSTABLE FEET - FOR OVERLAYING WOODEN TOP PLATE
F14100/F14101/F14102/F14103/F14104/F14105/F14112/F14113/F14114/F14115/F14116/F14117

Shelving system with wooden panels and back panel. To be used with overlaying wooden top plate.
Starter bay includes 2 outer panels and 1 back panel.
Add-on bay includes 1 intermediate panel and 1 back panel.

- For overlaying top plate, see pages 131-137.
- For shelves, see pages 138-169.
- For accessories, see page 170-186.

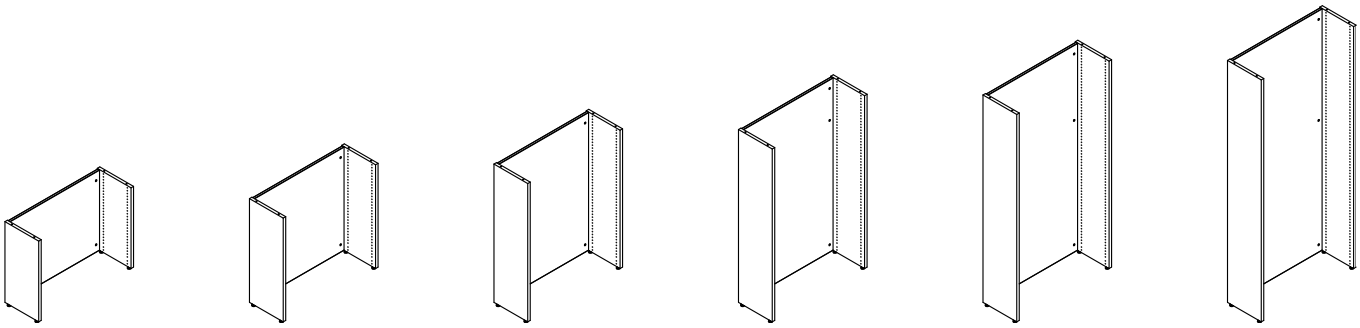

Single-sided starter bay - H720/920/1220/1520/1820/2120 mm

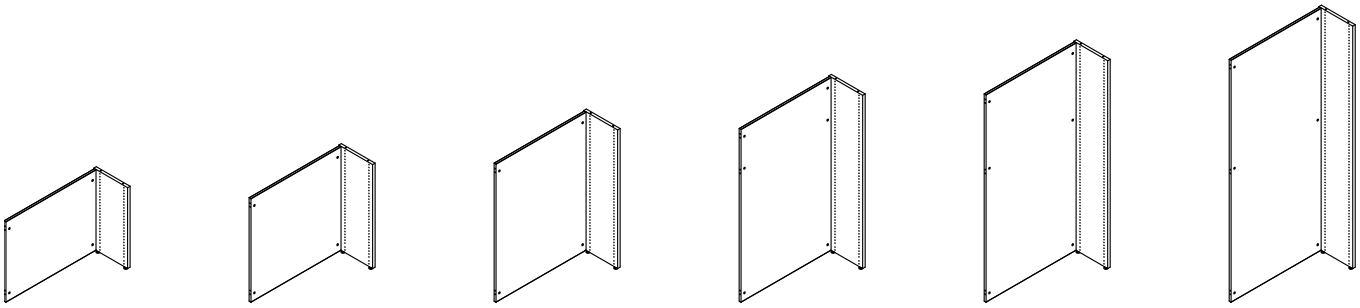

Single-sided add-on bay - H720/920/1220/1520/1820/2120 mm

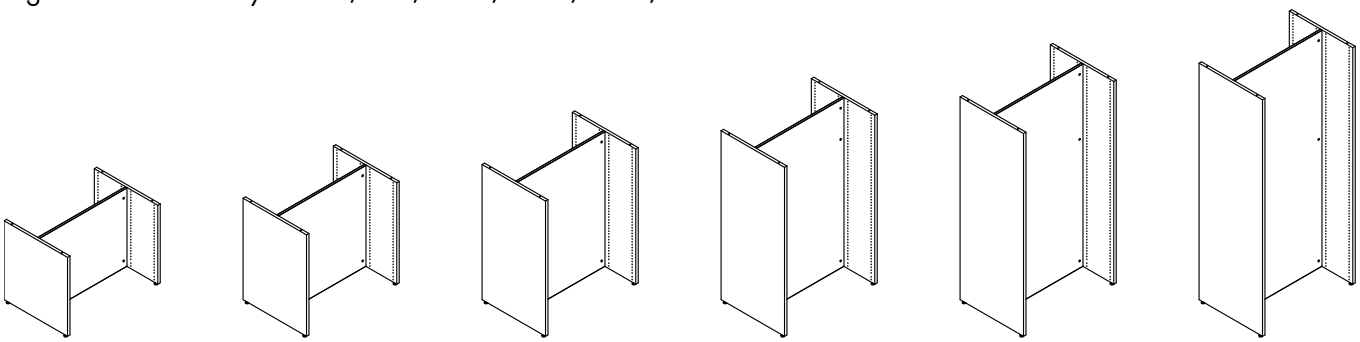

Double-sided starter bay - H720/920/1220/1520/1820/2120 mm

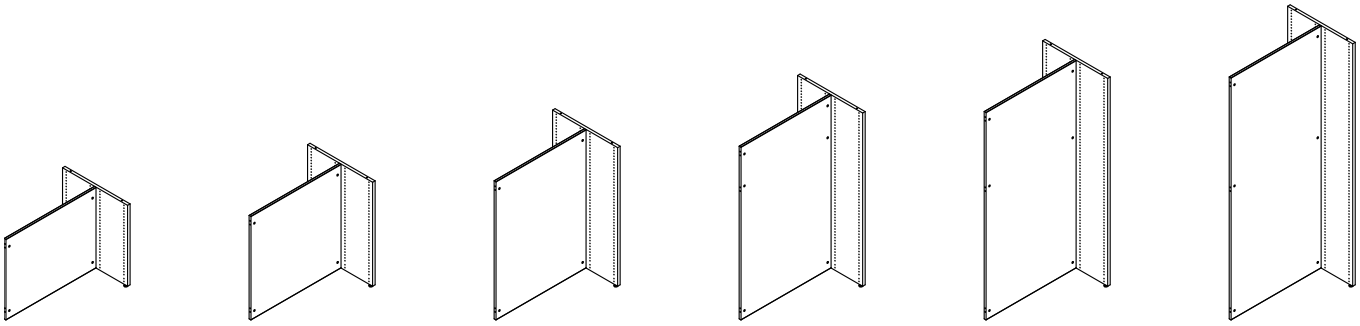

Double-sided add-on bay - H720/920/1220/1520/1820/2120 mm

LINGO SHELVING SYSTEM

SINGLE-SIDED - WOODEN BACK PANEL - ADJUSTABLE FEET - FOR OVERLAYING WOODEN TOP PLATE

Painted and veneered Lingo Shelving Systems are FSC-certified.

H720 mm

Module mm	Shelf depth mm	Item no. Starter bay	Melamine F14100	Painted F14101	Veneer F14102	Item no. Add-on bay	Melamine F14103	Painted F14104	Veneer F14105
500	250	F141xx121010000000	-	-	-	F141xx121010000000	-	-	-
500	300	F141xx131010000000	-	-	-	F141xx131010000000	-	-	-
500	400	F141xx151010000000	-	-	-	F141xx151010000000	-	-	-
750	250	F141xx122010000000	-	-	-	F141xx122010000000	-	-	-
750	300	F141xx132010000000	-	-	-	F141xx132010000000	-	-	-
750	400	F141xx152010000000	-	-	-	F141xx152010000000	-	-	-
900	250	F141xx123010000000	-	-	-	F141xx123010000000	-	-	-
900	300	F141xx133010000000	-	-	-	F141xx133010000000	-	-	-
900	400	F141xx153010000000	-	-	-	F141xx153010000000	-	-	-
1000	250	F141xx124010000000	-	-	-	F141xx124010000000	-	-	-
1000	300	F141xx134010000000	-	-	-	F141xx134010000000	-	-	-
1000	400	F141xx154010000000	-	-	-	F141xx154010000000	-	-	-

H920 mm

Module mm	Shelf depth mm	Item no. Starter bay	Melamine F14100	Painted F14101	Veneer F14102	Item no. Add-on bay	Melamine F14103	Painted F14104	Veneer F14105
500	250	F141xx221010000000	-	-	-	F141xx221010000000	-	-	-
500	300	F141xx231010000000	-	-	-	F141xx231010000000	-	-	-
500	400	F141xx251010000000	-	-	-	F141xx251010000000	-	-	-
750	250	F141xx222010000000	-	-	-	F141xx222010000000	-	-	-
750	300	F141xx232010000000	-	-	-	F141xx232010000000	-	-	-
750	400	F141xx252010000000	-	-	-	F141xx252010000000	-	-	-
900	250	F141xx223010000000	-	-	-	F141xx223010000000	-	-	-
900	300	F141xx233010000000	-	-	-	F141xx233010000000	-	-	-
900	400	F141xx253010000000	-	-	-	F141xx253010000000	-	-	-
1000	250	F141xx224010000000	-	-	-	F141xx224010000000	-	-	-
1000	300	F141xx234010000000	-	-	-	F141xx234010000000	-	-	-
1000	400	F141xx254010000000	-	-	-	F141xx254010000000	-	-	-

H1220 mm

Module mm	Shelf depth mm	Item no. Starter bay	Melamine F14100	Painted F14101	Veneer F14102	Item no. Add-on bay	Melamine F14103	Painted F14104	Veneer F14105
500	250	F141xx321010000000	-	-	-	F141xx321010000000	-	-	-
500	300	F141xx331010000000	-	-	-	F141xx331010000000	-	-	-
500	400	F141xx351010000000	-	-	-	F141xx351010000000	-	-	-
750	250	F141xx322010000000	-	-	-	F141xx322010000000	-	-	-
750	300	F141xx332010000000	-	-	-	F141xx332010000000	-	-	-
750	400	F141xx352010000000	-	-	-	F141xx352010000000	-	-	-
900	250	F141xx323010000000	-	-	-	F141xx323010000000	-	-	-
900	300	F141xx333010000000	-	-	-	F141xx333010000000	-	-	-
900	400	F141xx353010000000	-	-	-	F141xx353010000000	-	-	-
1000	250	F141xx324010000000	-	-	-	F141xx324010000000	-	-	-
1000	300	F141xx334010000000	-	-	-	F141xx334010000000	-	-	-
1000	400	F141xx354010000000	-	-	-	F141xx354010000000	-	-	-

LINGO SHELVING SYSTEM

SINGLE-SIDED - WOODEN BACK PANEL - ADJUSTABLE FEET - FOR OVERLAYING WOODEN TOP PLATE

Painted and veneered Lingo Shelving Systems are FSC-certified.

H1520 mm

Module mm	Shelf depth mm	Item no. Starter bay	Melamine F14100	Painted F14101	Veneer F14102	Item no. Add-on bay	Melamine F14103	Painted F14104	Veneer F14105
500	250	F141xx421010000000	-	-	-	F141xx421010000000	-	-	-
500	300	F141xx431010000000	-	-	-	F141xx431010000000	-	-	-
500	400	F141xx451010000000	-	-	-	F141xx451010000000	-	-	-
750	250	F141xx422010000000	-	-	-	F141xx422010000000	-	-	-
750	300	F141xx432010000000	-	-	-	F141xx432010000000	-	-	-
750	400	F141xx452010000000	-	-	-	F141xx452010000000	-	-	-
900	250	F141xx423010000000	-	-	-	F141xx423010000000	-	-	-
900	300	F141xx433010000000	-	-	-	F141xx433010000000	-	-	-
900	400	F141xx453010000000	-	-	-	F141xx453010000000	-	-	-
1000	250	F141xx424010000000	-	-	-	F141xx424010000000	-	-	-
1000	300	F141xx434010000000	-	-	-	F141xx434010000000	-	-	-
1000	400	F141xx454010000000	-	-	-	F141xx454010000000	-	-	-

H1820 mm

Module mm	Shelf depth mm	Item no. Starter bay	Melamine F14100	Painted F14101	Veneer F14102	Item no. Add-on bay	Melamine F14103	Painted F14104	Veneer F14105
500	250	F141xx521010000000	-	-	-	F141xx521010000000	-	-	-
500	300	F141xx531010000000	-	-	-	F141xx531010000000	-	-	-
500	400	F141xx551010000000	-	-	-	F141xx551010000000	-	-	-
750	250	F141xx522010000000	-	-	-	F141xx522010000000	-	-	-
750	300	F141xx532010000000	-	-	-	F141xx532010000000	-	-	-
750	400	F141xx552010000000	-	-	-	F141xx552010000000	-	-	-
900	250	F141xx523010000000	-	-	-	F141xx523010000000	-	-	-
900	300	F141xx533010000000	-	-	-	F141xx533010000000	-	-	-
900	400	F141xx553010000000	-	-	-	F141xx553010000000	-	-	-
1000	250	F141xx524010000000	-	-	-	F141xx524010000000	-	-	-
1000	300	F141xx534010000000	-	-	-	F141xx534010000000	-	-	-
1000	400	F141xx554010000000	-	-	-	F141xx554010000000	-	-	-

H2120 mm

Module mm	Shelf depth mm	Item no. Starter bay	Melamine F14100	Painted F14101	Veneer F14102	Item no. Add-on bay	Melamine F14103	Painted F14104	Veneer F14105
500	250	F141xx621010000000	-	-	-	F141xx621010000000	-	-	-
500	300	F141xx631010000000	-	-	-	F141xx631010000000	-	-	-
500	400	F141xx651010000000	-	-	-	F141xx651010000000	-	-	-
750	250	F141xx622010000000	-	-	-	F141xx622010000000	-	-	-
750	300	F141xx632010000000	-	-	-	F141xx632010000000	-	-	-
750	400	F141xx652010000000	-	-	-	F141xx652010000000	-	-	-
900	250	F141xx623010000000	-	-	-	F141xx623010000000	-	-	-
900	300	F141xx633010000000	-	-	-	F141xx633010000000	-	-	-
900	400	F141xx653010000000	-	-	-	F141xx653010000000	-	-	-
1000	250	F141xx624010000000	-	-	-	F141xx624010000000	-	-	-
1000	300	F141xx634010000000	-	-	-	F141xx634010000000	-	-	-
1000	400	F141xx654010000000	-	-	-	F141xx654010000000	-	-	-

LINGO SHELVING SYSTEM

DOUBLE-SIDED - WOODEN BACK PANEL - ADJUSTABLE FEET - FOR OVERLAYING WOODEN TOP PLATE

Painted and veneered Lingo Shelving Systems are FSC-certified.

H720 mm

Module mm	Shelf depth mm	Item no. Starter bay	Melamine F14112	Painted F14113	Veneer F14114	Item no. Add-on bay	Melamine F14115	Painted F14116	Veneer F14117
500	250	F141xx121010000000	-	-	-	F141xx121010000000	-	-	-
500	300	F141xx131010000000	-	-	-	F141xx131010000000	-	-	-
500	400	F141xx151010000000	-	-	-	F141xx151010000000	-	-	-
750	250	F141xx122010000000	-	-	-	F141xx122010000000	-	-	-
750	300	F141xx132010000000	-	-	-	F141xx132010000000	-	-	-
750	400	F141xx152010000000	-	-	-	F141xx152010000000	-	-	-
900	250	F141xx123010000000	-	-	-	F141xx123010000000	-	-	-
900	300	F141xx133010000000	-	-	-	F141xx133010000000	-	-	-
900	400	F141xx153010000000	-	-	-	F141xx153010000000	-	-	-
1000	250	F141xx124010000000	-	-	-	F141xx124010000000	-	-	-
1000	300	F141xx134010000000	-	-	-	F141xx134010000000	-	-	-
1000	400	F141xx154010000000	-	-	-	F141xx154010000000	-	-	-

H920 mm

Module mm	Shelf depth mm	Item no. Starter bay	Melamine F14112	Painted F14113	Veneer F14114	Item no. Add-on bay	Melamine F14115	Painted F14116	Veneer F14117
500	250	F141xx221010000000	-	-	-	F141xx221010000000	-	-	-
500	300	F141xx231010000000	-	-	-	F141xx231010000000	-	-	-
500	400	F141xx251010000000	-	-	-	F141xx251010000000	-	-	-
750	250	F141xx222010000000	-	-	-	F141xx222010000000	-	-	-
750	300	F141xx232010000000	-	-	-	F141xx232010000000	-	-	-
750	400	F141xx252010000000	-	-	-	F141xx252010000000	-	-	-
900	250	F141xx223010000000	-	-	-	F141xx223010000000	-	-	-
900	300	F141xx233010000000	-	-	-	F141xx233010000000	-	-	-
900	400	F141xx253010000000	-	-	-	F141xx253010000000	-	-	-
1000	250	F141xx224010000000	-	-	-	F141xx224010000000	-	-	-
1000	300	F141xx234010000000	-	-	-	F141xx234010000000	-	-	-
1000	400	F141xx254010000000	-	-	-	F141xx254010000000	-	-	-

H1220 mm

Module mm	Shelf depth mm	Item no. Starter bay	Melamine F14112	Painted F14113	Veneer F14114	Item no. Add-on bay	Melamine F14115	Painted F14116	Veneer F14117
500	250	F141xx321010000000	-	-	-	F141xx321010000000	-	-	-
500	300	F141xx331010000000	-	-	-	F141xx331010000000	-	-	-
500	400	F141xx351010000000	-	-	-	F141xx351010000000	-	-	-
750	250	F141xx322010000000	-	-	-	F141xx322010000000	-	-	-
750	300	F141xx332010000000	-	-	-	F141xx332010000000	-	-	-
750	400	F141xx352010000000	-	-	-	F141xx352010000000	-	-	-
900	250	F141xx323010000000	-	-	-	F141xx323010000000	-	-	-
900	300	F141xx333010000000	-	-	-	F141xx333010000000	-	-	-
900	400	F141xx353010000000	-	-	-	F141xx353010000000	-	-	-
1000	250	F141xx324010000000	-	-	-	F141xx324010000000	-	-	-
1000	300	F141xx334010000000	-	-	-	F141xx334010000000	-	-	-
1000	400	F141xx354010000000	-	-	-	F141xx354010000000	-	-	-

LINGO SHELVING SYSTEM

DOUBLE-SIDED - WOODEN BACK PANEL - ADJUSTABLE FEET - FOR OVERLAYING WOODEN TOP PLATE

Painted and veneered Lingo Shelving Systems are FSC-certified.

H1520 mm

Module mm	Shelf depth mm	Item no. Starter bay	Melamine F14112	Painted F14113	Veneer F14114	Item no. Add-on bay	Melamine F14115	Painted F14116	Veneer F14117
500	250	F141xx421010000000	-	-	-	F141xx421010000000	-	-	-
500	300	F141xx431010000000	-	-	-	F141xx431010000000	-	-	-
500	400	F141xx451010000000	-	-	-	F141xx451010000000	-	-	-
750	250	F141xx422010000000	-	-	-	F141xx422010000000	-	-	-
750	300	F141xx432010000000	-	-	-	F141xx432010000000	-	-	-
750	400	F141xx452010000000	-	-	-	F141xx452010000000	-	-	-
900	250	F141xx423010000000	-	-	-	F141xx423010000000	-	-	-
900	300	F141xx433010000000	-	-	-	F141xx433010000000	-	-	-
900	400	F141xx453010000000	-	-	-	F141xx453010000000	-	-	-
1000	250	F141xx424010000000	-	-	-	F141xx424010000000	-	-	-
1000	300	F141xx434010000000	-	-	-	F141xx434010000000	-	-	-
1000	400	F141xx454010000000	-	-	-	F141xx454010000000	-	-	-

H1820 mm

Module mm	Shelf depth mm	Item no. Starter bay	Melamine F14112	Painted F14113	Veneer F14114	Item no. Add-on bay	Melamine F14115	Painted F14116	Veneer F14117
500	250	F141xx521010000000	-	-	-	F141xx521010000000	-	-	-
500	300	F141xx531010000000	-	-	-	F141xx531010000000	-	-	-
500	400	F141xx551010000000	-	-	-	F141xx551010000000	-	-	-
750	250	F141xx522010000000	-	-	-	F141xx522010000000	-	-	-
750	300	F141xx532010000000	-	-	-	F141xx532010000000	-	-	-
750	400	F141xx552010000000	-	-	-	F141xx552010000000	-	-	-
900	250	F141xx523010000000	-	-	-	F141xx523010000000	-	-	-
900	300	F141xx533010000000	-	-	-	F141xx533010000000	-	-	-
900	400	F141xx553010000000	-	-	-	F141xx553010000000	-	-	-
1000	250	F141xx524010000000	-	-	-	F141xx524010000000	-	-	-
1000	300	F141xx534010000000	-	-	-	F141xx534010000000	-	-	-
1000	400	F141xx554010000000	-	-	-	F141xx554010000000	-	-	-

H2120 mm

Module mm	Shelf depth mm	Item no. Starter bay	Melamine F14112	Painted F14113	Veneer F14114	Item no. Add-on bay	Melamine F14115	Painted F14116	Veneer F14117
500	250	F141xx621010000000	-	-	-	F141xx621010000000	-	-	-
500	300	F141xx631010000000	-	-	-	F141xx631010000000	-	-	-
500	400	F141xx651010000000	-	-	-	F141xx651010000000	-	-	-
750	250	F141xx622010000000	-	-	-	F141xx622010000000	-	-	-
750	300	F141xx632010000000	-	-	-	F141xx632010000000	-	-	-
750	400	F141xx652010000000	-	-	-	F141xx652010000000	-	-	-
900	250	F141xx623010000000	-	-	-	F141xx623010000000	-	-	-
900	300	F141xx633010000000	-	-	-	F141xx633010000000	-	-	-
900	400	F141xx653010000000	-	-	-	F141xx653010000000	-	-	-
1000	250	F141xx624010000000	-	-	-	F141xx624010000000	-	-	-
1000	300	F141xx634010000000	-	-	-	F141xx634010000000	-	-	-
1000	400	F141xx654010000000	-	-	-	F141xx654010000000	-	-	-

LINGO SHELVING SYSTEM

CROSS BRACE - ADJUSTABLE FEET - FOR OVERLAYING WOODEN TOP PLATE

LINGO SHELVING SYSTEM

CROSS BRACE - ADJUSTABLE FEET - FOR OVERLAYING WOODEN TOP PLATE

F14100/F14101/F14102/F14103/F14104/F14105/F14112/F14113/F14114/F14115/F14116/F14117

Shelving system with wooden panels and cross brace. To be used with overlaying wooden top plate.
Starter bay includes 2 outer panels and 1 cross brace.
Add-on bay includes 1 intermediate panel and 1 cross brace.
Middle shelf must be screwed into panels for bays above 920 mm.

- For overlaying wooden top plate, see page 131-137.
- For shelves, see page 138-169.
- For accessories, see page 170-186.

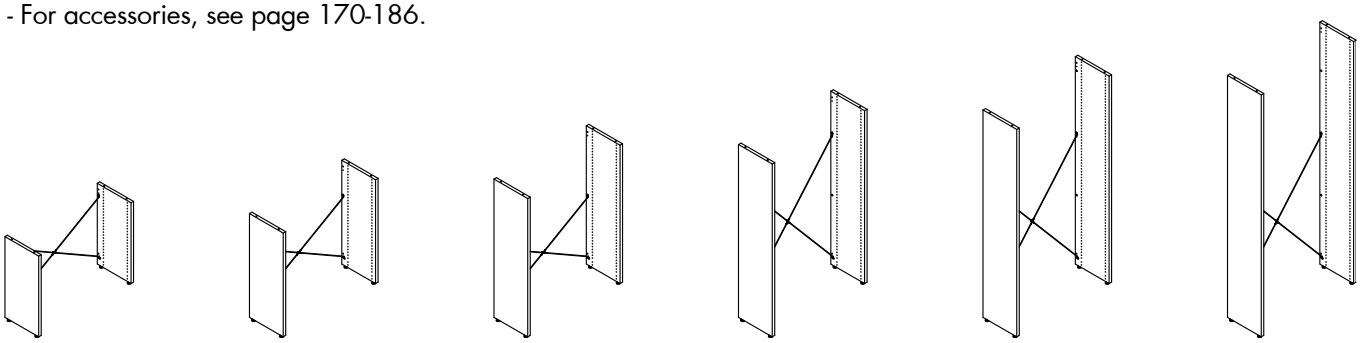

Single-sided starter bay - H720/920/1220/1520/1820/2120 mm

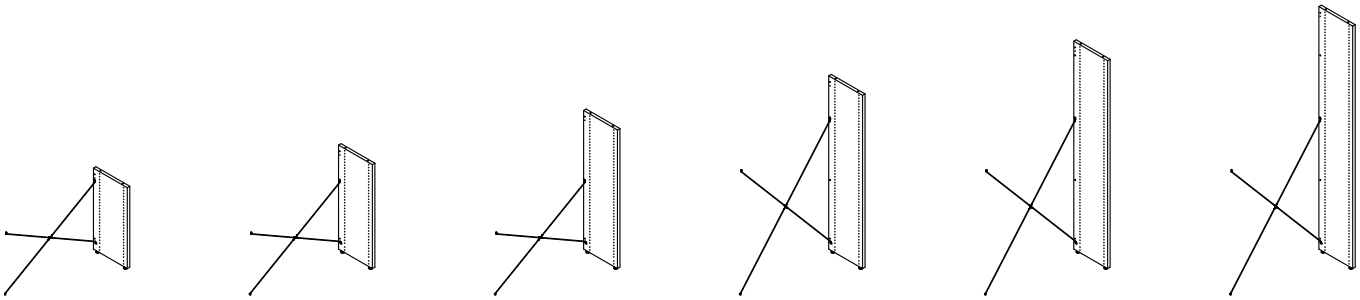

Single-sided add-on bay - H720/920/1220/1520/1820/2120 mm

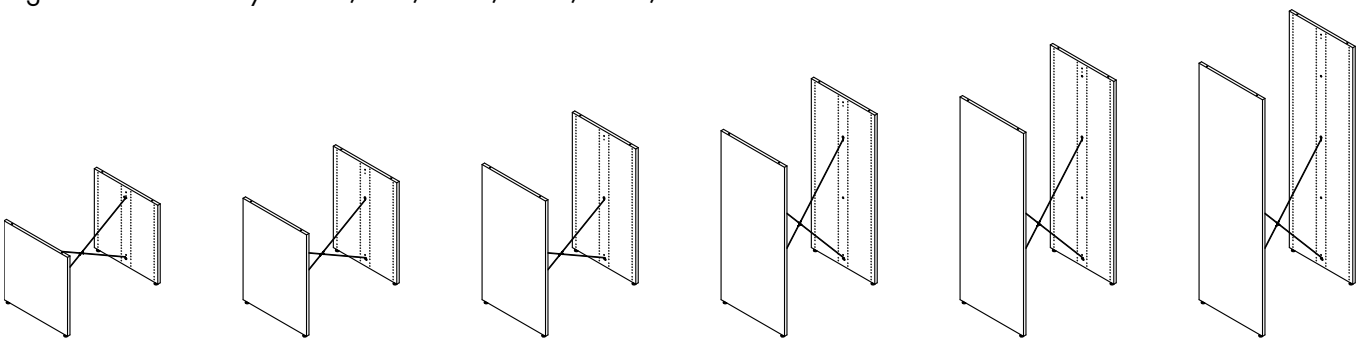

Double-sided starter bay - H720/920/1220/1520/1820/2120 mm

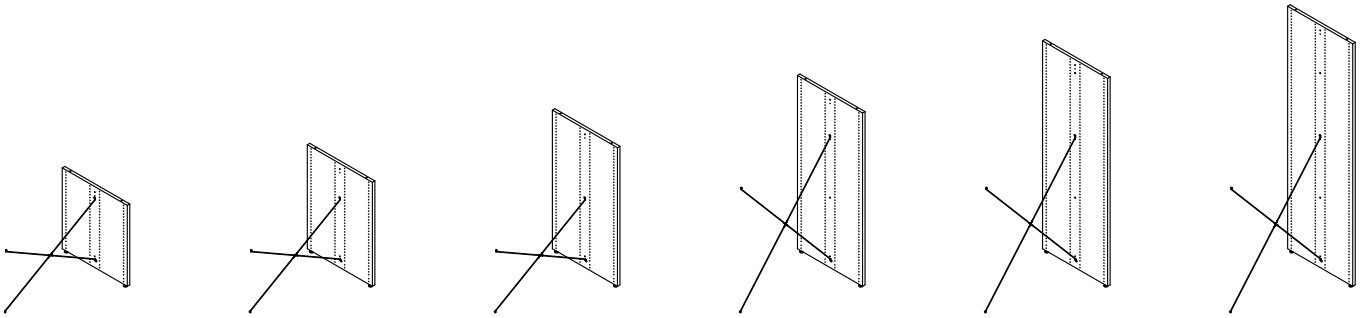

Double-sided add-on bay - H720/920/1220/1520/1820/2120 mm

LINGO SHELVING SYSTEM

SINGLE-SIDED - CROSS BRACE - ADJUSTABLE FEET - FOR OVERLAYING WOODEN TOP PLATE

Painted and veneered Lingo Shelving Systems are FSC-certified.

H720 mm

Module mm	Shelf depth mm	Item no. Starter bay	Melamine F14100	Painted F14101	Veneer F14102	Item no. Add-on bay	Melamine F14103	Painted F14104	Veneer F14105
500	250	F141xx121100000000	-	-	-	F141xx121100000000	-	-	-
500	300	F141xx131100000000	-	-	-	F141xx131100000000	-	-	-
500	400	F141xx151100000000	-	-	-	F141xx151100000000	-	-	-
750	250	F141xx122100000000	-	-	-	F141xx122100000000	-	-	-
750	300	F141xx132100000000	-	-	-	F141xx132100000000	-	-	-
750	400	F141xx152100000000	-	-	-	F141xx152100000000	-	-	-
900	250	F141xx123100000000	-	-	-	F141xx123100000000	-	-	-
900	300	F141xx133100000000	-	-	-	F141xx133100000000	-	-	-
900	400	F141xx153100000000	-	-	-	F141xx153100000000	-	-	-
1000	250	F141xx124100000000	-	-	-	F141xx124100000000	-	-	-
1000	300	F141xx134100000000	-	-	-	F141xx134100000000	-	-	-
1000	400	F141xx154100000000	-	-	-	F141xx154100000000	-	-	-

H920 mm

Module mm	Shelf depth mm	Item no. Starter bay	Melamine F14100	Painted F14101	Veneer F14102	Item no. Add-on bay	Melamine F14103	Painted F14104	Veneer F14105
500	250	F141xx221100000000	-	-	-	F141xx221100000000	-	-	-
500	300	F141xx231100000000	-	-	-	F141xx231100000000	-	-	-
500	400	F141xx251100000000	-	-	-	F141xx251100000000	-	-	-
750	250	F141xx222100000000	-	-	-	F141xx222100000000	-	-	-
750	300	F141xx232100000000	-	-	-	F141xx232100000000	-	-	-
750	400	F141xx252100000000	-	-	-	F141xx252100000000	-	-	-
900	250	F141xx223100000000	-	-	-	F141xx223100000000	-	-	-
900	300	F141xx233100000000	-	-	-	F141xx233100000000	-	-	-
900	400	F141xx253100000000	-	-	-	F141xx253100000000	-	-	-
1000	250	F141xx224100000000	-	-	-	F141xx224100000000	-	-	-
1000	300	F141xx234100000000	-	-	-	F141xx234100000000	-	-	-
1000	400	F141xx254100000000	-	-	-	F141xx254100000000	-	-	-

H1220 mm

Module mm	Shelf depth mm	Item no. Starter bay	Melamine F14100	Painted F14101	Veneer F14102	Item no. Add-on bay	Melamine F14103	Painted F14104	Veneer F14105
500	250	F141xx321100000000	-	-	-	F141xx321100000000	-	-	-
500	300	F141xx331100000000	-	-	-	F141xx331100000000	-	-	-
500	400	F141xx351100000000	-	-	-	F141xx351100000000	-	-	-
750	250	F141xx322100000000	-	-	-	F141xx322100000000	-	-	-
750	300	F141xx332100000000	-	-	-	F141xx332100000000	-	-	-
750	400	F141xx352100000000	-	-	-	F141xx352100000000	-	-	-
900	250	F141xx323100000000	-	-	-	F141xx323100000000	-	-	-
900	300	F141xx333100000000	-	-	-	F141xx333100000000	-	-	-
900	400	F141xx353100000000	-	-	-	F141xx353100000000	-	-	-
1000	250	F141xx324100000000	-	-	-	F141xx324100000000	-	-	-
1000	300	F141xx334100000000	-	-	-	F141xx334100000000	-	-	-
1000	400	F141xx354100000000	-	-	-	F141xx354100000000	-	-	-

LINGO SHELVING SYSTEM

SINGLE-SIDED - CROSS BRACE - ADJUSTABLE FEET - FOR OVERLAYING WOODEN TOP PLATE

Painted and veneered Lingo Shelving Systems are FSC-certified.

H1520 mm

Module mm	Shelf depth mm	Item no. Starter bay	Melamine F14100	Painted F14101	Veneer F14102	Item no. Add-on bay	Melamine F14103	Painted F14104	Veneer F14105
500	250	F141xx421100000000	-	-	-	F141xx421100000000	-	-	-
500	300	F141xx431100000000	-	-	-	F141xx431100000000	-	-	-
500	400	F141xx451100000000	-	-	-	F141xx451100000000	-	-	-
750	250	F141xx422100000000	-	-	-	F141xx422100000000	-	-	-
750	300	F141xx432100000000	-	-	-	F141xx432100000000	-	-	-
750	400	F141xx452100000000	-	-	-	F141xx452100000000	-	-	-
900	250	F141xx423100000000	-	-	-	F141xx423100000000	-	-	-
900	300	F141xx433100000000	-	-	-	F141xx433100000000	-	-	-
900	400	F141xx453100000000	-	-	-	F141xx453100000000	-	-	-
1000	250	F141xx424100000000	-	-	-	F141xx424100000000	-	-	-
1000	300	F141xx434100000000	-	-	-	F141xx434100000000	-	-	-
1000	400	F141xx454100000000	-	-	-	F141xx454100000000	-	-	-

H1820 mm

Module mm	Shelf depth mm	Item no. Starter bay	Melamine F14100	Painted F14101	Veneer F14102	Item no. Add-on bay	Melamine F14103	Painted F14104	Veneer F14105
500	250	F141xx521100000000	-	-	-	F141xx521100000000	-	-	-
500	300	F141xx531100000000	-	-	-	F141xx531100000000	-	-	-
500	400	F141xx551100000000	-	-	-	F141xx551100000000	-	-	-
750	250	F141xx522100000000	-	-	-	F141xx522100000000	-	-	-
750	300	F141xx532100000000	-	-	-	F141xx532100000000	-	-	-
750	400	F141xx552100000000	-	-	-	F141xx552100000000	-	-	-
900	250	F141xx523100000000	-	-	-	F141xx523100000000	-	-	-
900	300	F141xx533100000000	-	-	-	F141xx533100000000	-	-	-
900	400	F141xx553100000000	-	-	-	F141xx553100000000	-	-	-
1000	250	F141xx524100000000	-	-	-	F141xx524100000000	-	-	-
1000	300	F141xx534100000000	-	-	-	F141xx534100000000	-	-	-
1000	400	F141xx554100000000	-	-	-	F141xx554100000000	-	-	-

H2120 mm

Module mm	Shelf depth mm	Item no. Starter bay	Melamine F14100	Painted F14101	Veneer F14102	Item no. Add-on bay	Melamine F14103	Painted F14104	Veneer F14105
500	250	F141xx621100000000	-	-	-	F141xx621100000000	-	-	-
500	300	F141xx631100000000	-	-	-	F141xx631100000000	-	-	-
500	400	F141xx651100000000	-	-	-	F141xx651100000000	-	-	-
750	250	F141xx622100000000	-	-	-	F141xx622100000000	-	-	-
750	300	F141xx632100000000	-	-	-	F141xx632100000000	-	-	-
750	400	F141xx652100000000	-	-	-	F141xx652100000000	-	-	-
900	250	F141xx623100000000	-	-	-	F141xx623100000000	-	-	-
900	300	F141xx633100000000	-	-	-	F141xx633100000000	-	-	-
900	400	F141xx653100000000	-	-	-	F141xx653100000000	-	-	-
1000	250	F141xx624100000000	-	-	-	F141xx624100000000	-	-	-
1000	300	F141xx634100000000	-	-	-	F141xx634100000000	-	-	-
1000	400	F141xx654100000000	-	-	-	F141xx654100000000	-	-	-

LINGO SHELVING SYSTEM

DOUBLE-SIDED - CROSS BRACE - ADJUSTABLE FEET - FOR OVERLAYING WOODEN TOP PLATE

Painted and veneered Lingo Shelving Systems are FSC-certified.

H720 mm

Module mm	Shelf depth mm	Item no. Starter bay	Melamine F14112	Painted F14113	Veneer F14114	Item no. Add-on bay	Melamine F14115	Painted F14116	Veneer F14117
500	250	F141xx121100000000	-	-	-	F141xx121100000000	-	-	-
500	300	F141xx131100000000	-	-	-	F141xx131100000000	-	-	-
500	400	F141xx151100000000	-	-	-	F141xx151100000000	-	-	-
750	250	F141xx122100000000	-	-	-	F141xx122100000000	-	-	-
750	300	F141xx132100000000	-	-	-	F141xx132100000000	-	-	-
750	400	F141xx152100000000	-	-	-	F141xx152100000000	-	-	-
900	250	F141xx123100000000	-	-	-	F141xx123100000000	-	-	-
900	300	F141xx133100000000	-	-	-	F141xx133100000000	-	-	-
900	400	F141xx153100000000	-	-	-	F141xx153100000000	-	-	-
1000	250	F141xx124100000000	-	-	-	F141xx124100000000	-	-	-
1000	300	F141xx134100000000	-	-	-	F141xx134100000000	-	-	-
1000	400	F141xx154100000000	-	-	-	F141xx154100000000	-	-	-

H920 mm

Module mm	Shelf depth mm	Item no. Starter bay	Melamine F14112	Painted F14113	Veneer F14114	Item no. Add-on bay	Melamine F14115	Painted F14116	Veneer F14117
500	250	F141xx221100000000	-	-	-	F141xx221100000000	-	-	-
500	300	F141xx231100000000	-	-	-	F141xx231100000000	-	-	-
500	400	F141xx251100000000	-	-	-	F141xx251100000000	-	-	-
750	250	F141xx222100000000	-	-	-	F141xx222100000000	-	-	-
750	300	F141xx232100000000	-	-	-	F141xx232100000000	-	-	-
750	400	F141xx252100000000	-	-	-	F141xx252100000000	-	-	-
900	250	F141xx223100000000	-	-	-	F141xx223100000000	-	-	-
900	300	F141xx233100000000	-	-	-	F141xx233100000000	-	-	-
900	400	F141xx253100000000	-	-	-	F141xx253100000000	-	-	-
1000	250	F141xx224100000000	-	-	-	F141xx224100000000	-	-	-
1000	300	F141xx234100000000	-	-	-	F141xx234100000000	-	-	-
1000	400	F141xx254100000000	-	-	-	F141xx254100000000	-	-	-

H1220 mm

Module mm	Shelf depth mm	Item no. Starter bay	Melamine F14112	Painted F14113	Veneer F14114	Item no. Add-on bay	Melamine F14115	Painted F14116	Veneer F14117
500	250	F141xx321100000000	-	-	-	F141xx321100000000	-	-	-
500	300	F141xx331100000000	-	-	-	F141xx331100000000	-	-	-
500	400	F141xx351100000000	-	-	-	F141xx351100000000	-	-	-
750	250	F141xx322100000000	-	-	-	F141xx322100000000	-	-	-
750	300	F141xx332100000000	-	-	-	F141xx332100000000	-	-	-
750	400	F141xx352100000000	-	-	-	F141xx352100000000	-	-	-
900	250	F141xx323100000000	-	-	-	F141xx323100000000	-	-	-
900	300	F141xx333100000000	-	-	-	F141xx333100000000	-	-	-
900	400	F141xx353100000000	-	-	-	F141xx353100000000	-	-	-
1000	250	F141xx324100000000	-	-	-	F141xx324100000000	-	-	-
1000	300	F141xx334100000000	-	-	-	F141xx334100000000	-	-	-
1000	400	F141xx354100000000	-	-	-	F141xx354100000000	-	-	-

LINGO SHELVING SYSTEM

DOUBLE-SIDED - CROSS BRACE - ADJUSTABLE FEET - FOR OVERLAYING WOODEN TOP PLATE

Painted and veneered Lingo Shelving Systems are FSC-certified.

H1520 mm

Module mm	Shelf depth mm	Item no. Starter bay	Melamine F14112	Painted F14113	Veneer F14114	Item no. Add-on bay	Melamine F14115	Painted F14116	Veneer F14117
500	250	F141xx421100000000	-	-	-	F141xx421100000000	-	-	-
500	300	F141xx431100000000	-	-	-	F141xx431100000000	-	-	-
500	400	F141xx451100000000	-	-	-	F141xx451100000000	-	-	-
750	250	F141xx422100000000	-	-	-	F141xx422100000000	-	-	-
750	300	F141xx432100000000	-	-	-	F141xx432100000000	-	-	-
750	400	F141xx452100000000	-	-	-	F141xx452100000000	-	-	-
900	250	F141xx423100000000	-	-	-	F141xx423100000000	-	-	-
900	300	F141xx433100000000	-	-	-	F141xx433100000000	-	-	-
900	400	F141xx453100000000	-	-	-	F141xx453100000000	-	-	-
1000	250	F141xx424100000000	-	-	-	F141xx424100000000	-	-	-
1000	300	F141xx434100000000	-	-	-	F141xx434100000000	-	-	-
1000	400	F141xx454100000000	-	-	-	F141xx454100000000	-	-	-

H1820 mm

Module mm	Shelf depth mm	Item no. Starter bay	Melamine F14112	Painted F14113	Veneer F14114	Item no. Add-on bay	Melamine F14115	Painted F14116	Veneer F14117
500	250	F141xx521100000000	-	-	-	F141xx521100000000	-	-	-
500	300	F141xx531100000000	-	-	-	F141xx531100000000	-	-	-
500	400	F141xx551100000000	-	-	-	F141xx551100000000	-	-	-
750	250	F141xx522100000000	-	-	-	F141xx522100000000	-	-	-
750	300	F141xx532100000000	-	-	-	F141xx532100000000	-	-	-
750	400	F141xx552100000000	-	-	-	F141xx552100000000	-	-	-
900	250	F141xx523100000000	-	-	-	F141xx523100000000	-	-	-
900	300	F141xx533100000000	-	-	-	F141xx533100000000	-	-	-
900	400	F141xx553100000000	-	-	-	F141xx553100000000	-	-	-
1000	250	F141xx524100000000	-	-	-	F141xx524100000000	-	-	-
1000	300	F141xx534100000000	-	-	-	F141xx534100000000	-	-	-
1000	400	F141xx554100000000	-	-	-	F141xx554100000000	-	-	-

H2120 mm

Module mm	Shelf depth mm	Item no. Starter bay	Melamine F14112	Painted F14113	Veneer F14114	Item no. Add-on bay	Melamine F14115	Painted F14116	Veneer F14117
500	250	F141xx621100000000	-	-	-	F141xx621100000000	-	-	-
500	300	F141xx631100000000	-	-	-	F141xx631100000000	-	-	-
500	400	F141xx651100000000	-	-	-	F141xx651100000000	-	-	-
750	250	F141xx622100000000	-	-	-	F141xx622100000000	-	-	-
750	300	F141xx632100000000	-	-	-	F141xx632100000000	-	-	-
750	400	F141xx652100000000	-	-	-	F141xx652100000000	-	-	-
900	250	F141xx623100000000	-	-	-	F141xx623100000000	-	-	-
900	300	F141xx633100000000	-	-	-	F141xx633100000000	-	-	-
900	400	F141xx653100000000	-	-	-	F141xx653100000000	-	-	-
1000	250	F141xx624100000000	-	-	-	F141xx624100000000	-	-	-
1000	300	F141xx634100000000	-	-	-	F141xx634100000000	-	-	-
1000	400	F141xx654100000000	-	-	-	F141xx654100000000	-	-	-

LINGO SHELVING SYSTEM

STEEL BACK FRAME - CASTOR PLATE - FOR TOP SHELF

LINGO SHELVING SYSTEM

STEEL BACK FRAME - CASTOR PLATE - FOR TOP SHELF
F14200/F14201/F14202

Shelving system with wooden panels, metal back frame and castor plate.
To be used with top shelf.

- For top shelves, see pages 116-130.
- For shelves, see page 138-169.
- For accessories, see page 170-186.

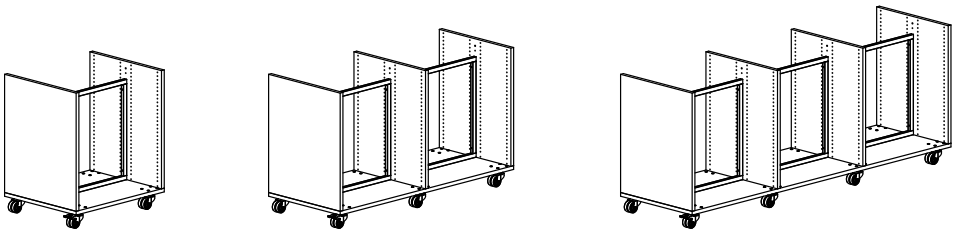

Double-sided H920 mm - 1/2/3 bays

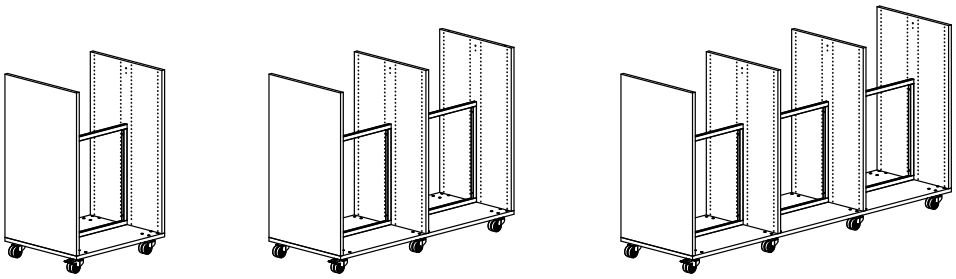

Double-sided H1220 mm - 1/2/3 bays

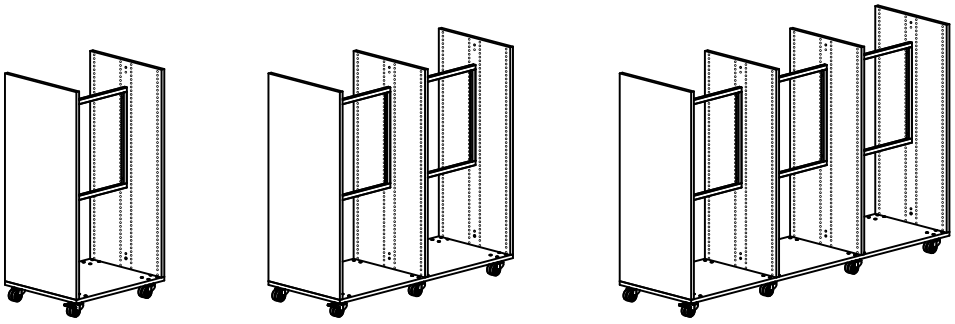

Double-sided H1520 mm - 1/2/3 bays

LINGO SHELVING SYSTEM

DOUBLE-SIDED - STEEL BACK FRAME - CASTOR PLATE - FOR TOP SHELF

Painted and veneered Lingo Shelving Systems are FSC-certified.

H920 mm

Module mm	Shelf depth mm	No. of bays	Item no.	Melamine F14200	Painted F14201	Veneer F14202
500	250	1	F142xx2211040000000	-	-	-
500	250	2	F142xx2212040000000	-	-	-
500	250	3	F142xx2213040000000	-	-	-
500	300	1	F142xx2311040000000	-	-	-
500	300	2	F142xx2312040000000	-	-	-
500	300	3	F142xx2313040000000	-	-	-
500	400	1	F142xx2511040000000	-	-	-
500	400	2	F142xx2512040000000	-	-	-
500	400	3	F142xx2513040000000	-	-	-
750	250	1	F142xx2221040000000	-	-	-
750	250	2	F142xx2222040000000	-	-	-
750	250	3	F142xx2223040000000	-	-	-
750	300	1	F142xx2321040000000	-	-	-
750	300	2	F142xx2322040000000	-	-	-
750	300	3	F142xx2323040000000	-	-	-
750	400	1	F142xx2521040000000	-	-	-
750	400	2	F142xx2522040000000	-	-	-
750	400	3	F142xx2523040000000	-	-	-
900	250	1	F142xx2231040000000	-	-	-
900	250	2	F142xx2232040000000	-	-	-
900	300	1	F142xx2331040000000	-	-	-
900	300	2	F142xx2332040000000	-	-	-
900	400	1	F142xx2531040000000	-	-	-
900	400	2	F142xx2532040000000	-	-	-
1000	250	1	F142xx2241040000000	-	-	-
1000	250	2	F142xx2242040000000	-	-	-
1000	300	1	F142xx2341040000000	-	-	-
1000	300	2	F142xx2342040000000	-	-	-
1000	400	1	F142xx2541040000000	-	-	-
1000	400	2	F142xx2542040000000	-	-	-

LINGO SHELVING SYSTEM

DOUBLE-SIDED - STEEL BACK FRAME - CASTOR PLATE - FOR TOP SHELF

Painted and veneered Lingo Shelving Systems are FSC-certified.

H1220 mm

Module mm	Shelf depth mm	No. of bays	Item no.	Melamine F14200	Painted F14201	Veneer F14202
500	250	1	F142xx3211040000000	-	-	-
500	250	2	F142xx3212040000000	-	-	-
500	250	3	F142xx3213040000000	-	-	-
500	300	1	F142xx3311040000000	-	-	-
500	300	2	F142xx3312040000000	-	-	-
500	300	3	F142xx3313040000000	-	-	-
500	400	1	F142xx3511040000000	-	-	-
500	400	2	F142xx3512040000000	-	-	-
500	400	3	F142xx3513040000000	-	-	-
750	250	1	F142xx3221040000000	-	-	-
750	250	2	F142xx3222040000000	-	-	-
750	250	3	F142xx3223040000000	-	-	-
750	300	1	F142xx3321040000000	-	-	-
750	300	2	F142xx3322040000000	-	-	-
750	300	3	F142xx3323040000000	-	-	-
750	400	1	F142xx3521040000000	-	-	-
750	400	2	F142xx3522040000000	-	-	-
750	400	3	F142xx3523040000000	-	-	-
900	250	1	F142xx3231040000000	-	-	-
900	250	2	F142xx3232040000000	-	-	-
900	300	1	F142xx3331040000000	-	-	-
900	300	2	F142xx3332040000000	-	-	-
900	400	1	F142xx3531040000000	-	-	-
900	400	2	F142xx3532040000000	-	-	-
1000	250	1	F142xx3241040000000	-	-	-
1000	250	2	F142xx3242040000000	-	-	-
1000	300	1	F142xx3341040000000	-	-	-
1000	300	2	F142xx3342040000000	-	-	-
1000	400	1	F142xx3541040000000	-	-	-
1000	400	2	F142xx3542040000000	-	-	-

LINGO SHELVING SYSTEM

DOUBLE-SIDED - STEEL BACK FRAME - CASTOR PLATE - FOR TOP SHELF

Painted and veneered Lingo Shelving Systems are FSC-certified.

H1520 mm

Module mm	Shelf depth mm	No. of bays	Item no.	Melamine F14200	Painted F14201	Veneer F14202
500	250	1	F142xx4211040000000	-	-	-
500	250	2	F142xx4212040000000	-	-	-
500	250	3	F142xx4213040000000	-	-	-
500	300	1	F142xx4311040000000	-	-	-
500	300	2	F142xx4312040000000	-	-	-
500	300	3	F142xx4313040000000	-	-	-
500	400	1	F142xx4511040000000	-	-	-
500	400	2	F142xx4512040000000	-	-	-
500	400	3	F142xx4513040000000	-	-	-
750	250	1	F142xx4221040000000	-	-	-
750	250	2	F142xx4222040000000	-	-	-
750	250	3	F142xx4223040000000	-	-	-
750	300	1	F142xx4321040000000	-	-	-
750	300	2	F142xx4322040000000	-	-	-
750	300	3	F142xx4323040000000	-	-	-
750	400	1	F142xx4521040000000	-	-	-
750	400	2	F142xx4522040000000	-	-	-
750	400	3	F142xx4523040000000	-	-	-
900	250	1	F142xx4231040000000	-	-	-
900	250	2	F142xx4232040000000	-	-	-
900	300	1	F142xx4331040000000	-	-	-
900	300	2	F142xx4332040000000	-	-	-
900	400	1	F142xx4531040000000	-	-	-
900	400	2	F142xx4532040000000	-	-	-
1000	250	1	F142xx4241040000000	-	-	-
1000	250	2	F142xx4242040000000	-	-	-
1000	300	1	F142xx4341040000000	-	-	-
1000	300	2	F142xx4342040000000	-	-	-
1000	400	1	F142xx4541040000000	-	-	-
1000	400	2	F142xx4542040000000	-	-	-

BCI

LINGO SHELVING SYSTEM

HIGH WOODEN BACK PANEL - CASTOR PLATE - FOR TOP SHELF

LINGO SHELVING SYSTEM

HIGH WOODEN BACK PANEL - CASTOR PLATE - FOR TOP SHELF
F14200/F14201/F14202

Shelving system with wooden panels, wooden back panel and castor plate.
To be used with ST1 standard depth, ST2, ST4 and WT1 standard depth top shelf.

- For top shelves, see pages 116-130.
- For shelves, see page 138-169.
- For accessories, see page 170-186.

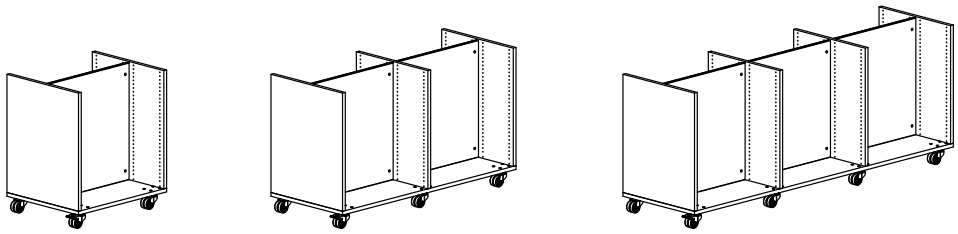

Double-sided H920 mm - 1/2/3 bays

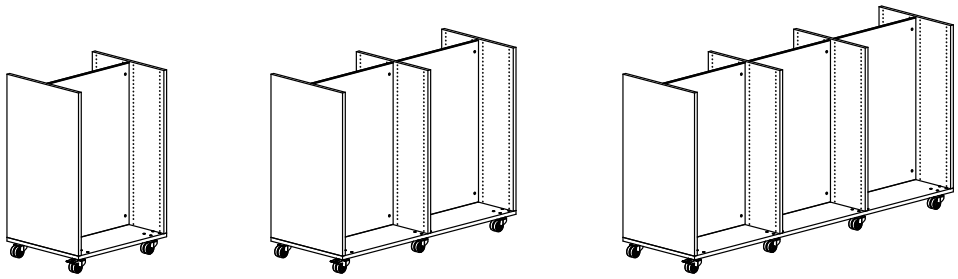

Double-sided H1220 mm - 1/2/3 bays

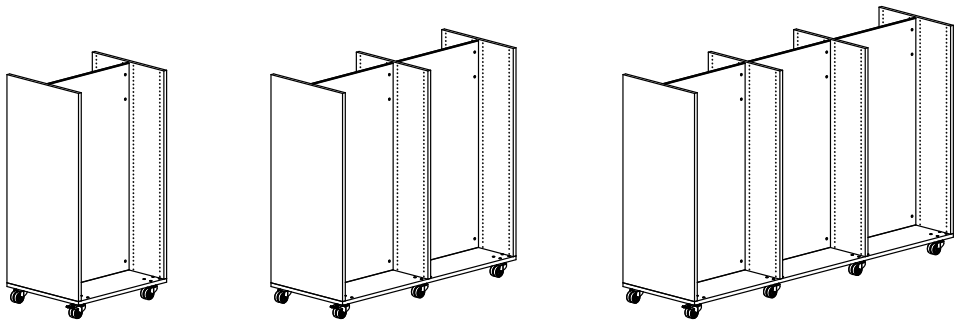

Double-sided H1520 mm - 1/2/3 bays

LINGO SHELVING SYSTEM

DOUBLE-SIDED - HIGH WOODEN BACK PANEL - CASTOR PLATE - FOR TOP SHELF

Painted and veneered Lingo Shelving Systems are FSC-certified.

H920 mm

Module mm	Shelf depth mm	No. of bays	Item no.	Melamine F14200	Painted F14201	Veneer F14202
500	250	1	F142xx2211030000000	-	-	-
500	250	2	F142xx2212030000000	-	-	-
500	250	3	F142xx2213030000000	-	-	-
500	300	1	F142xx2311030000000	-	-	-
500	300	2	F142xx2312030000000	-	-	-
500	300	3	F142xx2313030000000	-	-	-
500	400	1	F142xx2511030000000	-	-	-
500	400	2	F142xx2512030000000	-	-	-
500	400	3	F142xx2513030000000	-	-	-
750	250	1	F142xx2221030000000	-	-	-
750	250	2	F142xx2222030000000	-	-	-
750	250	3	F142xx2223030000000	-	-	-
750	300	1	F142xx2321030000000	-	-	-
750	300	2	F142xx2322030000000	-	-	-
750	300	3	F142xx2323030000000	-	-	-
750	400	1	F142xx2521030000000	-	-	-
750	400	2	F142xx2522030000000	-	-	-
750	400	3	F142xx2523030000000	-	-	-
900	250	1	F142xx2231030000000	-	-	-
900	250	2	F142xx2232030000000	-	-	-
900	300	1	F142xx2331030000000	-	-	-
900	300	2	F142xx2332030000000	-	-	-
900	400	1	F142xx2531030000000	-	-	-
900	400	2	F142xx2532030000000	-	-	-
1000	250	1	F142xx2241030000000	-	-	-
1000	250	2	F142xx2242030000000	-	-	-
1000	300	1	F142xx2341030000000	-	-	-
1000	300	2	F142xx2342030000000	-	-	-
1000	400	1	F142xx2541030000000	-	-	-
1000	400	2	F142xx2542030000000	-	-	-

LINGO SHELVING SYSTEM

DOUBLE-SIDED - HIGH WOODEN BACK PANEL - CASTOR PLATE - FOR TOP SHELF

Painted and veneered Lingo Shelving Systems are FSC-certified.

H1220 mm

Module mm	Shelf depth mm	No. of bays	Item no.	Melamine F14200	Painted F14201	Veneer F14202
500	250	1	F142xx3211030000000	-	-	-
500	250	2	F142xx3212030000000	-	-	-
500	250	3	F142xx3213030000000	-	-	-
500	300	1	F142xx3311030000000	-	-	-
500	300	2	F142xx3312030000000	-	-	-
500	300	3	F142xx3313030000000	-	-	-
500	400	1	F142xx3511030000000	-	-	-
500	400	2	F142xx3512030000000	-	-	-
500	400	3	F142xx3513030000000	-	-	-
750	250	1	F142xx3221030000000	-	-	-
750	250	2	F142xx3222030000000	-	-	-
750	250	3	F142xx3223030000000	-	-	-
750	300	1	F142xx3321030000000	-	-	-
750	300	2	F142xx3322030000000	-	-	-
750	300	3	F142xx3323030000000	-	-	-
750	400	1	F142xx3521030000000	-	-	-
750	400	2	F142xx3522030000000	-	-	-
750	400	3	F142xx3523030000000	-	-	-
900	250	1	F142xx3231030000000	-	-	-
900	250	2	F142xx3232030000000	-	-	-
900	300	1	F142xx3331030000000	-	-	-
900	300	2	F142xx3332030000000	-	-	-
900	400	1	F142xx3531030000000	-	-	-
900	400	2	F142xx3532030000000	-	-	-
1000	250	1	F142xx3241030000000	-	-	-
1000	250	2	F142xx3242030000000	-	-	-
1000	300	1	F142xx3341030000000	-	-	-
1000	300	2	F142xx3342030000000	-	-	-
1000	400	1	F142xx3541030000000	-	-	-
1000	400	2	F142xx3542030000000	-	-	-

LINGO SHELVING SYSTEM

DOUBLE-SIDED - HIGH WOODEN BACK PANEL - CASTOR PLATE - FOR TOP SHELF

Painted and veneered Lingo Shelving Systems are FSC-certified.

H1520 mm

Module mm	Shelf depth mm	No. of bays	Item no.	Melamine F14200	Painted F14201	Veneer F14202
500	250	1	F142xx4211030000000	-	-	-
500	250	2	F142xx4212030000000	-	-	-
500	250	3	F142xx4213030000000	-	-	-
500	300	1	F142xx4311030000000	-	-	-
500	300	2	F142xx4312030000000	-	-	-
500	300	3	F142xx4313030000000	-	-	-
500	400	1	F142xx4511030000000	-	-	-
500	400	2	F142xx4512030000000	-	-	-
500	400	3	F142xx4513030000000	-	-	-
750	250	1	F142xx4221030000000	-	-	-
750	250	2	F142xx4222030000000	-	-	-
750	250	3	F142xx4223030000000	-	-	-
750	300	1	F142xx4321030000000	-	-	-
750	300	2	F142xx4322030000000	-	-	-
750	300	3	F142xx4323030000000	-	-	-
750	400	1	F142xx4521030000000	-	-	-
750	400	2	F142xx4522030000000	-	-	-
750	400	3	F142xx4523030000000	-	-	-
900	250	1	F142xx4231030000000	-	-	-
900	250	2	F142xx4232030000000	-	-	-
900	300	1	F142xx4331030000000	-	-	-
900	300	2	F142xx4332030000000	-	-	-
900	400	1	F142xx4531030000000	-	-	-
900	400	2	F142xx4532030000000	-	-	-
1000	250	1	F142xx4241030000000	-	-	-
1000	250	2	F142xx4242030000000	-	-	-
1000	300	1	F142xx4341030000000	-	-	-
1000	300	2	F142xx4342030000000	-	-	-
1000	400	1	F142xx4541030000000	-	-	-
1000	400	2	F142xx4542030000000	-	-	-

LINGO SHELVING SYSTEM

LOW WOODEN BACK PANEL - CASTOR PLATE - FOR TOP SHELF

LINGO SHELVING SYSTEM

LOW WOODEN BACK PANEL - CASTOR PLATE - FOR TOP SHELF
F14200/F14201/F14202

Shelving system with wooden panels, low wooden back panel and castor plate.
To be used with ST1 double-sided and WT3 double-sided top shelf.

- For top shelves, see pages 116-130.
- For shelves, see page 138-169.
- For accessories, see page 170-186.

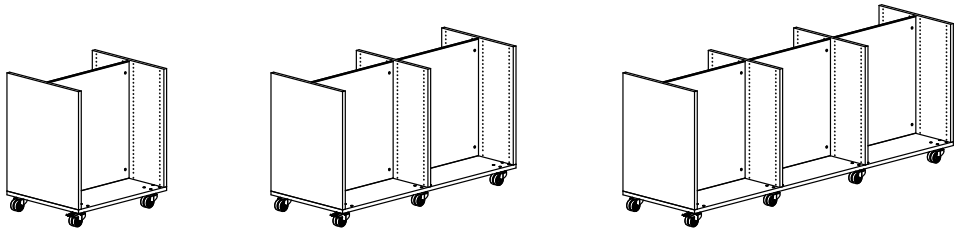

Double-sided H920 mm - 1/2/3 bays

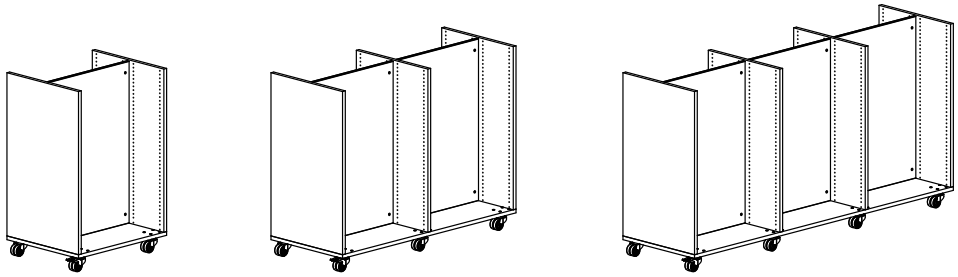

Double-sided H1220 mm - 1/2/3 bays

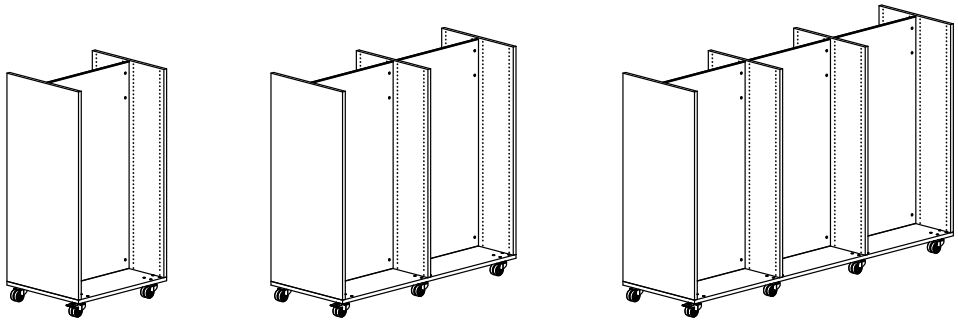

Double-sided H1520 mm - 1/2/3 bays

LINGO SHELVING SYSTEM

DOUBLE-SIDED - LOW WOODEN BACK PANEL - CASTOR PLATE - FOR TOP SHELF

Painted and veneered Lingo Shelving Systems are FSC-certified.

H920 mm

Module mm	Shelf depth mm	No. of bays	Item no.	Melamine F14200	Painted F14201	Veneer F14202
500	250	1	F142xx2211020000000	-	-	-
500	250	2	F142xx2212020000000	-	-	-
500	250	3	F142xx2213020000000	-	-	-
500	300	1	F142xx2311020000000	-	-	-
500	300	2	F142xx2312020000000	-	-	-
500	300	3	F142xx2313020000000	-	-	-
500	400	1	F142xx2511020000000	-	-	-
500	400	2	F142xx2512020000000	-	-	-
500	400	3	F142xx2513020000000	-	-	-
750	250	1	F142xx2221020000000	-	-	-
750	250	2	F142xx2222020000000	-	-	-
750	250	3	F142xx2223020000000	-	-	-
750	300	1	F142xx2321020000000	-	-	-
750	300	2	F142xx2322020000000	-	-	-
750	300	3	F142xx2323020000000	-	-	-
750	400	1	F142xx2521020000000	-	-	-
750	400	2	F142xx2522020000000	-	-	-
750	400	3	F142xx2523020000000	-	-	-
900	250	1	F142xx2231020000000	-	-	-
900	250	2	F142xx2232020000000	-	-	-
900	300	1	F142xx2331020000000	-	-	-
900	300	2	F142xx2332020000000	-	-	-
900	400	1	F142xx2531020000000	-	-	-
900	400	2	F142xx2532020000000	-	-	-
1000	250	1	F142xx2241020000000	-	-	-
1000	250	2	F142xx2242020000000	-	-	-
1000	300	1	F142xx2341020000000	-	-	-
1000	300	2	F142xx2342020000000	-	-	-
1000	400	1	F142xx2541020000000	-	-	-
1000	400	2	F142xx2542020000000	-	-	-

LINGO SHELVING SYSTEM

DOUBLE-SIDED - LOW WOODEN BACK PANEL - CASTOR PLATE - FOR TOP SHELF
F14200/F14201/F14202

Painted and veneered Lingo Shelving Systems are FSC-certified.

H1220 mm

Module mm	Shelf depth mm	No. of bays	Item no.	Melamine F14200	Painted F14201	Veneer F14202
500	250	1	F142xx3211020000000	-	-	-
500	250	2	F142xx3212020000000	-	-	-
500	250	3	F142xx3213020000000	-	-	-
500	300	1	F142xx3311020000000	-	-	-
500	300	2	F142xx3312020000000	-	-	-
500	300	3	F142xx3313020000000	-	-	-
500	400	1	F142xx3511020000000	-	-	-
500	400	2	F142xx3512020000000	-	-	-
500	400	3	F142xx3513020000000	-	-	-
750	250	1	F142xx3221020000000	-	-	-
750	250	2	F142xx3222020000000	-	-	-
750	250	3	F142xx3223020000000	-	-	-
750	300	1	F142xx3321020000000	-	-	-
750	300	2	F142xx3322020000000	-	-	-
750	300	3	F142xx3323020000000	-	-	-
750	400	1	F142xx3521020000000	-	-	-
750	400	2	F142xx3522020000000	-	-	-
750	400	3	F142xx3523020000000	-	-	-
900	250	1	F142xx3231020000000	-	-	-
900	250	2	F142xx3232020000000	-	-	-
900	300	1	F142xx3331020000000	-	-	-
900	300	2	F142xx3332020000000	-	-	-
900	400	1	F142xx3531020000000	-	-	-
900	400	2	F142xx3532020000000	-	-	-
1000	250	1	F142xx3241020000000	-	-	-
1000	250	2	F142xx3242020000000	-	-	-
1000	300	1	F142xx3341020000000	-	-	-
1000	300	2	F142xx3342020000000	-	-	-
1000	400	1	F142xx3541020000000	-	-	-
1000	400	2	F142xx3542020000000	-	-	-

LINGO SHELVING SYSTEM

DOUBLE-SIDED - LOW WOODEN BACK PANEL - CASTOR PLATE - FOR TOP SHELF

Painted and veneered Lingo Shelving Systems are FSC-certified.

H1520 mm

Module mm	Shelf depth mm	No. of bays	Item no.	Melamine F14200	Painted F14201	Veneer F14202
500	250	1	F142xx4211020000000	-	-	-
500	250	2	F142xx4212020000000	-	-	-
500	250	3	F142xx4213020000000	-	-	-
500	300	1	F142xx4311020000000	-	-	-
500	300	2	F142xx4312020000000	-	-	-
500	300	3	F142xx4313020000000	-	-	-
500	400	1	F142xx4511020000000	-	-	-
500	400	2	F142xx4512020000000	-	-	-
500	400	3	F142xx4513020000000	-	-	-
750	250	1	F142xx4221020000000	-	-	-
750	250	2	F142xx4222020000000	-	-	-
750	250	3	F142xx4223020000000	-	-	-
750	300	1	F142xx4321020000000	-	-	-
750	300	2	F142xx4322020000000	-	-	-
750	300	3	F142xx4323020000000	-	-	-
750	400	1	F142xx4521020000000	-	-	-
750	400	2	F142xx4522020000000	-	-	-
750	400	3	F142xx4523020000000	-	-	-
900	250	1	F142xx4231020000000	-	-	-
900	250	2	F142xx4232020000000	-	-	-
900	300	1	F142xx4331020000000	-	-	-
900	300	2	F142xx4332020000000	-	-	-
900	400	1	F142xx4531020000000	-	-	-
900	400	2	F142xx4532020000000	-	-	-
1000	250	1	F142xx4241020000000	-	-	-
1000	250	2	F142xx4242020000000	-	-	-
1000	300	1	F142xx4341020000000	-	-	-
1000	300	2	F142xx4342020000000	-	-	-
1000	400	1	F142xx4541020000000	-	-	-
1000	400	2	F142xx4542020000000	-	-	-

BCI

LINGO SHELVING SYSTEM

CROSS BRACE - CASTOR PLATE - FOR TOP SHELF

LINGO SHELVING SYSTEM

CROSS BRACE - CASTOR PLATE - FOR TOP SHELF
F14200/F14201/F14202

Shelving system with wooden panels, cross brace and castor plate.
To be used with top shelf.
Middle shelf must be screwed into panels for bays above 920 mm.

- For top shelves, see pages 116-130.
- For shelves, see page 138-169.
- For accessories, see page 170-186.

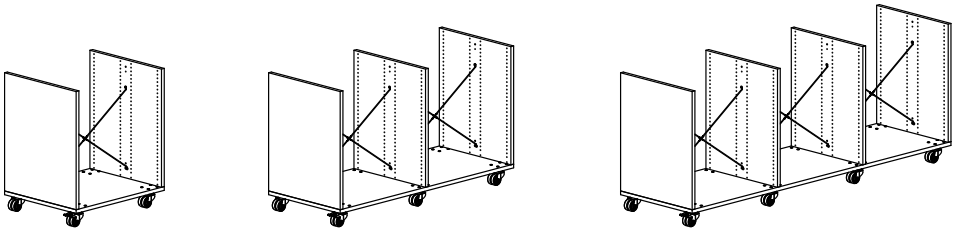

Double-sided H920 mm - 1/2/3 bays

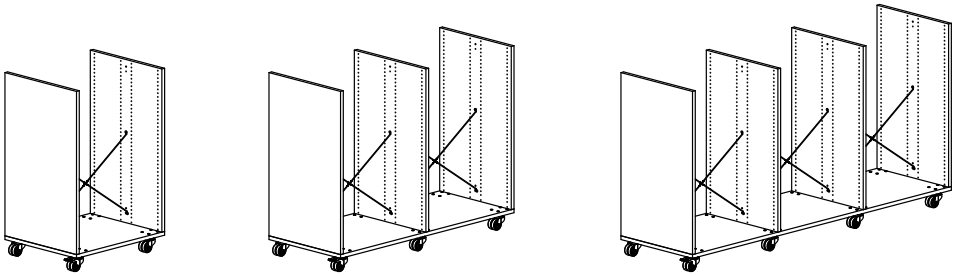

Double-sided H1220 mm - 1/2/3 bays

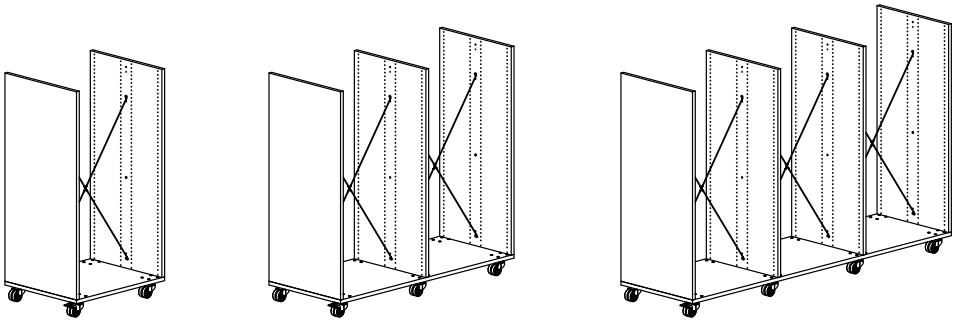

Double-sided H1520 mm - 1/2/3 bays

LINGO SHELVING SYSTEM

DOUBLE-SIDED - CROSS BRACE - CASTOR PLATE - FOR TOP SHELF

Painted and veneered Lingo Shelving Systems are FSC-certified.

H920 mm

Module mm	Shelf depth mm	No. of bays	Item no.	Melamine F14200	Painted F14201	Veneer F14202
500	250	1	F142xx2211100000000	-	-	-
500	250	2	F142xx2212100000000	-	-	-
500	250	3	F142xx2213100000000	-	-	-
500	300	1	F142xx2311100000000	-	-	-
500	300	2	F142xx2312100000000	-	-	-
500	300	3	F142xx2313100000000	-	-	-
500	400	1	F142xx2511100000000	-	-	-
500	400	2	F142xx2512100000000	-	-	-
500	400	3	F142xx2513100000000	-	-	-
750	250	1	F142xx2221100000000	-	-	-
750	250	2	F142xx2222100000000	-	-	-
750	250	3	F142xx2223100000000	-	-	-
750	300	1	F142xx2321100000000	-	-	-
750	300	2	F142xx2322100000000	-	-	-
750	300	3	F142xx2323100000000	-	-	-
750	400	1	F142xx2521100000000	-	-	-
750	400	2	F142xx2522100000000	-	-	-
750	400	3	F142xx2523100000000	-	-	-
900	250	1	F142xx2231100000000	-	-	-
900	250	2	F142xx2232100000000	-	-	-
900	300	1	F142xx2331100000000	-	-	-
900	300	2	F142xx2332100000000	-	-	-
900	400	1	F142xx2531100000000	-	-	-
900	400	2	F142xx2532100000000	-	-	-
1000	250	1	F142xx2241100000000	-	-	-
1000	250	2	F142xx2242100000000	-	-	-
1000	300	1	F142xx2341100000000	-	-	-
1000	300	2	F142xx2342100000000	-	-	-
1000	400	1	F142xx2541100000000	-	-	-
1000	400	2	F142xx2542100000000	-	-	-

LINGO SHELVING SYSTEM

DOUBLE-SIDED - CROSS BRACE - CASTOR PLATE - FOR TOP SHELF

Painted and veneered Lingo Shelving Systems are FSC-certified.

H1220 mm

Module mm	Shelf depth mm	No. of bays	Item no.	Melamine F14200	Painted F14201	Veneer F14202
500	250	1	F142xx3211100000000	-	-	-
500	250	2	F142xx3212100000000	-	-	-
500	250	3	F142xx3213100000000	-	-	-
500	300	1	F142xx3311100000000	-	-	-
500	300	2	F142xx3312100000000	-	-	-
500	300	3	F142xx3313100000000	-	-	-
500	400	1	F142xx3511100000000	-	-	-
500	400	2	F142xx3512100000000	-	-	-
500	400	3	F142xx3513100000000	-	-	-
750	250	1	F142xx3221100000000	-	-	-
750	250	2	F142xx3222100000000	-	-	-
750	250	3	F142xx3223100000000	-	-	-
750	300	1	F142xx3321100000000	-	-	-
750	300	2	F142xx3322100000000	-	-	-
750	300	3	F142xx3323100000000	-	-	-
750	400	1	F142xx3521100000000	-	-	-
750	400	2	F142xx3522100000000	-	-	-
750	400	3	F142xx3523100000000	-	-	-
900	250	1	F142xx3231100000000	-	-	-
900	250	2	F142xx3232100000000	-	-	-
900	300	1	F142xx3331100000000	-	-	-
900	300	2	F142xx3332100000000	-	-	-
900	400	1	F142xx3531100000000	-	-	-
900	400	2	F142xx3532100000000	-	-	-
1000	250	1	F142xx3241100000000	-	-	-
1000	250	2	F142xx3242100000000	-	-	-
1000	300	1	F142xx3341100000000	-	-	-
1000	300	2	F142xx3342100000000	-	-	-
1000	400	1	F142xx3541100000000	-	-	-
1000	400	2	F142xx3542100000000	-	-	-

LINGO SHELVING SYSTEM

DOUBLE-SIDED - CROSS BRACE - CASTOR PLATE - FOR TOP SHELF

Painted and veneered Lingo Shelving Systems are FSC-certified.

H1520 mm

Module mm	Shelf depth mm	No. of bays	Item no.	Melamine F14200	Painted F14201	Veneer F14202
500	250	1	F142xx4211100000000	-	-	-
500	250	2	F142xx4212100000000	-	-	-
500	250	3	F142xx4213100000000	-	-	-
500	300	1	F142xx4311100000000	-	-	-
500	300	2	F142xx4312100000000	-	-	-
500	300	3	F142xx4313100000000	-	-	-
500	400	1	F142xx4511100000000	-	-	-
500	400	2	F142xx4512100000000	-	-	-
500	400	3	F142xx4513100000000	-	-	-
750	250	1	F142xx4221100000000	-	-	-
750	250	2	F142xx4222100000000	-	-	-
750	250	3	F142xx4223100000000	-	-	-
750	300	1	F142xx4321100000000	-	-	-
750	300	2	F142xx4322100000000	-	-	-
750	300	3	F142xx4323100000000	-	-	-
750	400	1	F142xx4521100000000	-	-	-
750	400	2	F142xx4522100000000	-	-	-
750	400	3	F142xx4523100000000	-	-	-
900	250	1	F142xx4231100000000	-	-	-
900	250	2	F142xx4232100000000	-	-	-
900	300	1	F142xx4331100000000	-	-	-
900	300	2	F142xx4332100000000	-	-	-
900	400	1	F142xx4531100000000	-	-	-
900	400	2	F142xx4532100000000	-	-	-
1000	250	1	F142xx4241100000000	-	-	-
1000	250	2	F142xx4242100000000	-	-	-
1000	300	1	F142xx4341100000000	-	-	-
1000	300	2	F142xx4342100000000	-	-	-
1000	400	1	F142xx4541100000000	-	-	-
1000	400	2	F142xx4542100000000	-	-	-

ZERO GARDEN
1000
ART
ANTIQUAIRER
ALBERT BROOKMAN
Elliott Erwitt Sports
INTERIORS

BCI

LINGO SHELVING SYSTEM

STEEL BACK FRAME - CASTOR PLATE - FOR OVERLAYING WOODEN TOP PLATE

LINGO SHELVING SYSTEM

STEEL BACK FRAME - CASTOR PLATE - FOR OVERLAYING WOODEN TOP PLATE
F14300/F14301/F14302

Shelving system with wooden panels, metal back frame and castor plate.
To be used with wooden overlaying top plate.

- For overlaying top plates, see page 131-137.
- For shelves, see page 138-169.
- For accessories, see page 170-186.

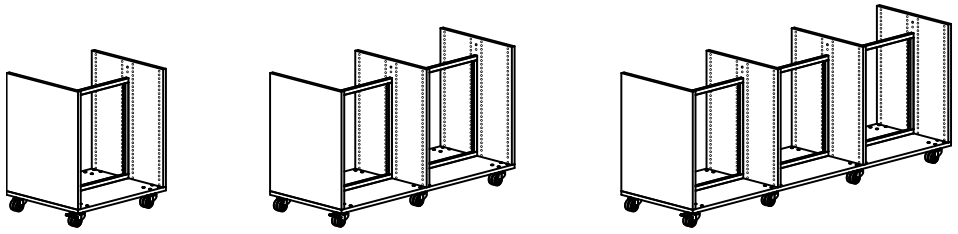

Double-sided H920 mm - 1/2/3 bays

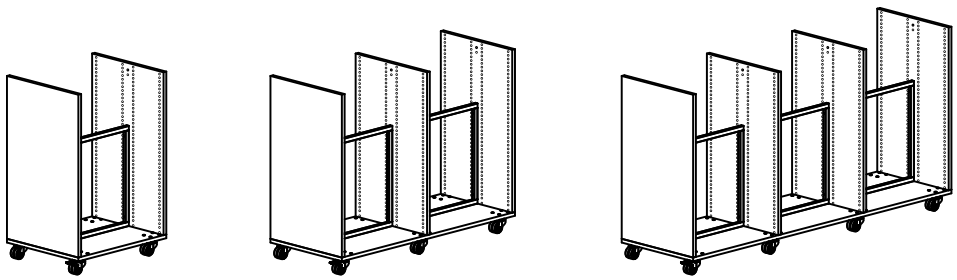

Double-sided H1220 mm - 1/2/3 bays

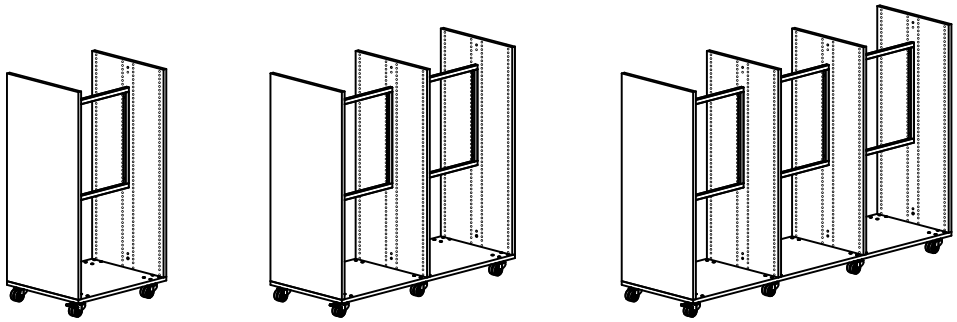

Double-sided H1520 mm - 1/2/3 bays

LINGO SHELVING SYSTEM

DOUBLE-SIDED - STEEL BACK FRAME - CASTOR PLATE - FOR OVERLAYING WOODEN TOP PLATE

Painted and veneered Lingo Shelving Systems are FSC-certified.

H920 mm

Module mm	Shelf depth mm	No. of bays	Item no.	Melamine F14300	Painted F14301	Veneer F14302
500	250	1	F143xx2211040000000	-	-	-
500	250	2	F143xx2212040000000	-	-	-
500	250	3	F143xx2213040000000	-	-	-
500	300	1	F143xx2311040000000	-	-	-
500	300	2	F143xx2312040000000	-	-	-
500	300	3	F143xx2313040000000	-	-	-
500	400	1	F143xx2511040000000	-	-	-
500	400	2	F143xx2512040000000	-	-	-
500	400	3	F143xx2513040000000	-	-	-
750	250	1	F143xx2221040000000	-	-	-
750	250	2	F143xx2222040000000	-	-	-
750	250	3	F143xx2223040000000	-	-	-
750	300	1	F143xx2321040000000	-	-	-
750	300	2	F143xx2322040000000	-	-	-
750	300	3	F143xx2323040000000	-	-	-
750	400	1	F143xx2521040000000	-	-	-
750	400	2	F143xx2522040000000	-	-	-
750	400	3	F143xx2523040000000	-	-	-
900	250	1	F143xx2231040000000	-	-	-
900	250	2	F143xx2232040000000	-	-	-
900	300	1	F143xx2331040000000	-	-	-
900	300	2	F143xx2332040000000	-	-	-
900	400	1	F143xx2531040000000	-	-	-
900	400	2	F143xx2532040000000	-	-	-
1000	250	1	F143xx2241040000000	-	-	-
1000	250	2	F143xx2242040000000	-	-	-
1000	300	1	F143xx2341040000000	-	-	-
1000	300	2	F143xx2342040000000	-	-	-
1000	400	1	F143xx2541040000000	-	-	-
1000	400	2	F143xx2542040000000	-	-	-

LINGO SHELVING SYSTEM

DOUBLE-SIDED - STEEL BACK FRAME - CASTOR PLATE - FOR OVERLAYING WOODEN TOP PLATE

Painted and veneered Lingo Shelving Systems are FSC-certified.

H1220 mm

Module mm	Shelf depth mm	No. of bays	Item no.	Melamine F14300	Painted F14301	Veneer F14302
500	250	1	F143xx3211040000000	-	-	-
500	250	2	F143xx3212040000000	-	-	-
500	250	3	F143xx3213040000000	-	-	-
500	300	1	F143xx3311040000000	-	-	-
500	300	2	F143xx3312040000000	-	-	-
500	300	3	F143xx3313040000000	-	-	-
500	400	1	F143xx3511040000000	-	-	-
500	400	2	F143xx3512040000000	-	-	-
500	400	3	F143xx3513040000000	-	-	-
750	250	1	F143xx3221040000000	-	-	-
750	250	2	F143xx3222040000000	-	-	-
750	250	3	F143xx3223040000000	-	-	-
750	300	1	F143xx3321040000000	-	-	-
750	300	2	F143xx3322040000000	-	-	-
750	300	3	F143xx3323040000000	-	-	-
750	400	1	F143xx3521040000000	-	-	-
750	400	2	F143xx3522040000000	-	-	-
750	400	3	F143xx3523040000000	-	-	-
900	250	1	F143xx3231040000000	-	-	-
900	250	2	F143xx3232040000000	-	-	-
900	300	1	F143xx3331040000000	-	-	-
900	300	2	F143xx3332040000000	-	-	-
900	400	1	F143xx3531040000000	-	-	-
900	400	2	F143xx3532040000000	-	-	-
1000	250	1	F143xx3241040000000	-	-	-
1000	250	2	F143xx3242040000000	-	-	-
1000	300	1	F143xx3341040000000	-	-	-
1000	300	2	F143xx3342040000000	-	-	-
1000	400	1	F143xx3541040000000	-	-	-
1000	400	2	F143xx3542040000000	-	-	-

LINGO SHELVING SYSTEM

DOUBLE-SIDED - STEEL BACK FRAME - CASTOR PLATE - FOR OVERLAYING WOODEN TOP PLATE

Painted and veneered Lingo Shelving Systems are FSC-certified.

H1520 mm

Module mm	Shelf depth mm	No. of bays	Item no.	Melamine F14300	Painted F14301	Veneer F14302
500	250	1	F143xx4211040000000	-	-	-
500	250	2	F143xx4212040000000	-	-	-
500	250	3	F143xx4213040000000	-	-	-
500	300	1	F143xx4311040000000	-	-	-
500	300	2	F143xx4312040000000	-	-	-
500	300	3	F143xx4313040000000	-	-	-
500	400	1	F143xx4511040000000	-	-	-
500	400	2	F143xx4512040000000	-	-	-
500	400	3	F143xx4513040000000	-	-	-
750	250	1	F143xx4221040000000	-	-	-
750	250	2	F143xx4222040000000	-	-	-
750	250	3	F143xx4223040000000	-	-	-
750	300	1	F143xx4321040000000	-	-	-
750	300	2	F143xx4322040000000	-	-	-
750	300	3	F143xx4323040000000	-	-	-
750	400	1	F143xx4521040000000	-	-	-
750	400	2	F143xx4522040000000	-	-	-
750	400	3	F143xx4523040000000	-	-	-
900	250	1	F143xx4231040000000	-	-	-
900	250	2	F143xx4232040000000	-	-	-
900	300	1	F143xx4331040000000	-	-	-
900	300	2	F143xx4332040000000	-	-	-
900	400	1	F143xx4531040000000	-	-	-
900	400	2	F143xx4532040000000	-	-	-
1000	250	1	F143xx4241040000000	-	-	-
1000	250	2	F143xx4242040000000	-	-	-
1000	300	1	F143xx4341040000000	-	-	-
1000	300	2	F143xx4342040000000	-	-	-
1000	400	1	F143xx4541040000000	-	-	-
1000	400	2	F143xx4542040000000	-	-	-

BCI

LINGO SHELVING SYSTEM

WOODEN BACK PANEL - CASTOR PLATE - FOR OVERLAYING WOODEN TOP PLATE

LINGO SHELVING SYSTEM

WOODEN BACK PANEL - CASTOR PLATE - FOR OVERLAYING WOODEN TOP PLATE
F14300/F14301/F14302

Shelving system with wooden panels, wooden back panel and castor plate.
To be used with overlaying top plate.

- For overlaying top plates, see page 131-137.
- For shelves, see page 138-169.
- For accessories, see page 170-186.

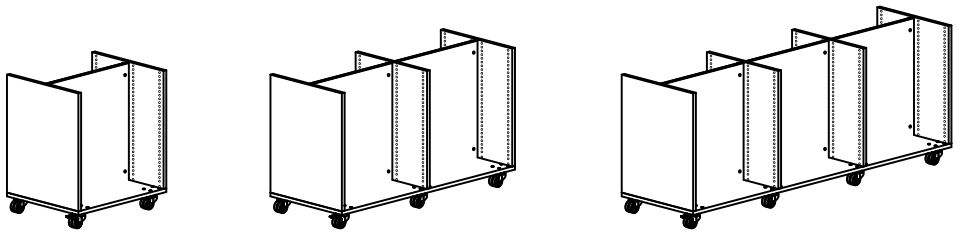

Double-sided H920 mm - 1/2/3 bays

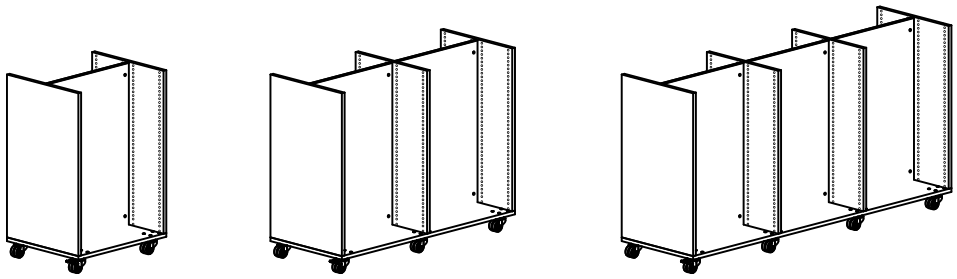

Double-sided H1220 mm - 1/2/3 bays

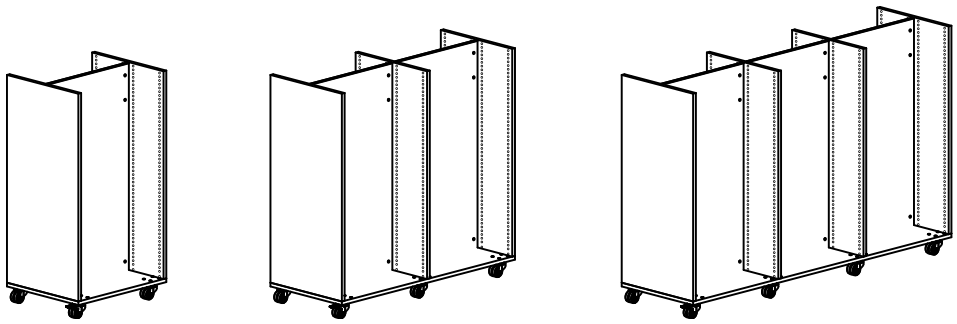

Double-sided H1520 mm - 1/2/3 bays

LINGO SHELVING SYSTEM

DOUBLE-SIDED - WOODEN BACK PANEL - CASTOR PLATE - FOR OVERLAYING WOODEN TOP PLATE

Painted and veneered Lingo Shelving Systems are FSC-certified.

H920 mm

Module mm	Shelf depth mm	No. of bays	Item no.	Melamine F14300	Painted F14301	Veneer F14302
500	250	1	F143xx2211010000000	-	-	-
500	250	2	F143xx2212010000000	-	-	-
500	250	3	F143xx2213010000000	-	-	-
500	300	1	F143xx2311010000000	-	-	-
500	300	2	F143xx2312010000000	-	-	-
500	300	3	F143xx2313010000000	-	-	-
500	400	1	F143xx2511010000000	-	-	-
500	400	2	F143xx2512010000000	-	-	-
500	400	3	F143xx2513010000000	-	-	-
750	250	1	F143xx2221010000000	-	-	-
750	250	2	F143xx2222010000000	-	-	-
750	250	3	F143xx2223010000000	-	-	-
750	300	1	F143xx2321010000000	-	-	-
750	300	2	F143xx2322010000000	-	-	-
750	300	3	F143xx2323010000000	-	-	-
750	400	1	F143xx2521010000000	-	-	-
750	400	2	F143xx2522010000000	-	-	-
750	400	3	F143xx2523010000000	-	-	-
900	250	1	F143xx2231010000000	-	-	-
900	250	2	F143xx2232010000000	-	-	-
900	300	1	F143xx2331010000000	-	-	-
900	300	2	F143xx2332010000000	-	-	-
900	400	1	F143xx2531010000000	-	-	-
900	400	2	F143xx2532010000000	-	-	-
1000	250	1	F143xx2241010000000	-	-	-
1000	250	2	F143xx2242010000000	-	-	-
1000	300	1	F143xx2341010000000	-	-	-
1000	300	2	F143xx2342010000000	-	-	-
1000	400	1	F143xx2541010000000	-	-	-
1000	400	2	F143xx2542010000000	-	-	-

LINGO SHELVING SYSTEM

DOUBLE-SIDED - WOODEN BACK PANEL - CASTOR PLATE - FOR OVERLAYING WOODEN TOP PLATE

Painted and veneered Lingo Shelving Systems are FSC-certified.

H1220 mm

Module mm	Shelf depth mm	No. of bays	Item no.	Melamine F14300	Painted F14301	Veneer F14302
500	250	1	F143xx3211010000000	-	-	-
500	250	2	F143xx3212010000000	-	-	-
500	250	3	F143xx3213010000000	-	-	-
500	300	1	F143xx3311010000000	-	-	-
500	300	2	F143xx3312010000000	-	-	-
500	300	3	F143xx3313010000000	-	-	-
500	400	1	F143xx3511010000000	-	-	-
500	400	2	F143xx3512010000000	-	-	-
500	400	3	F143xx3513010000000	-	-	-
750	250	1	F143xx3221010000000	-	-	-
750	250	2	F143xx3222010000000	-	-	-
750	250	3	F143xx3223010000000	-	-	-
750	300	1	F143xx3321010000000	-	-	-
750	300	2	F143xx3322010000000	-	-	-
750	300	3	F143xx3323010000000	-	-	-
750	400	1	F143xx3521010000000	-	-	-
750	400	2	F143xx3522010000000	-	-	-
750	400	3	F143xx3523010000000	-	-	-
900	250	1	F143xx3231010000000	-	-	-
900	250	2	F143xx3232010000000	-	-	-
900	300	1	F143xx3331010000000	-	-	-
900	300	2	F143xx3332010000000	-	-	-
900	400	1	F143xx3531010000000	-	-	-
900	400	2	F143xx3532010000000	-	-	-
1000	250	1	F143xx3241010000000	-	-	-
1000	250	2	F143xx3242010000000	-	-	-
1000	300	1	F143xx3341010000000	-	-	-
1000	300	2	F143xx3342010000000	-	-	-
1000	400	1	F143xx3541010000000	-	-	-
1000	400	2	F143xx3542010000000	-	-	-

LINGO SHELVING SYSTEM

DOUBLE-SIDED - WOODEN BACK PANEL - CASTOR PLATE - FOR OVERLAYING WOODEN TOP PLATE

Painted and veneered Lingo Shelving Systems are FSC-certified.

H1520 mm

Module mm	Shelf depth mm	No. of bays	Item no.	Melamine F14300	Painted F14301	Veneer F14302
500	250	1	F143xx4211010000000	-	-	-
500	250	2	F143xx4212010000000	-	-	-
500	250	3	F143xx4213010000000	-	-	-
500	300	1	F143xx4311010000000	-	-	-
500	300	2	F143xx4312010000000	-	-	-
500	300	3	F143xx4313010000000	-	-	-
500	400	1	F143xx4511010000000	-	-	-
500	400	2	F143xx4512010000000	-	-	-
500	400	3	F143xx4513010000000	-	-	-
750	250	1	F143xx4221010000000	-	-	-
750	250	2	F143xx4222010000000	-	-	-
750	250	3	F143xx4223010000000	-	-	-
750	300	1	F143xx4321010000000	-	-	-
750	300	2	F143xx4322010000000	-	-	-
750	300	3	F143xx4323010000000	-	-	-
750	400	1	F143xx4521010000000	-	-	-
750	400	2	F143xx4522010000000	-	-	-
750	400	3	F143xx4523010000000	-	-	-
900	250	1	F143xx4231010000000	-	-	-
900	250	2	F143xx4232010000000	-	-	-
900	300	1	F143xx4331010000000	-	-	-
900	300	2	F143xx4332010000000	-	-	-
900	400	1	F143xx4531010000000	-	-	-
900	400	2	F143xx4532010000000	-	-	-
1000	250	1	F143xx4241010000000	-	-	-
1000	250	2	F143xx4242010000000	-	-	-
1000	300	1	F143xx4341010000000	-	-	-
1000	300	2	F143xx4342010000000	-	-	-
1000	400	1	F143xx4541010000000	-	-	-
1000	400	2	F143xx4542010000000	-	-	-

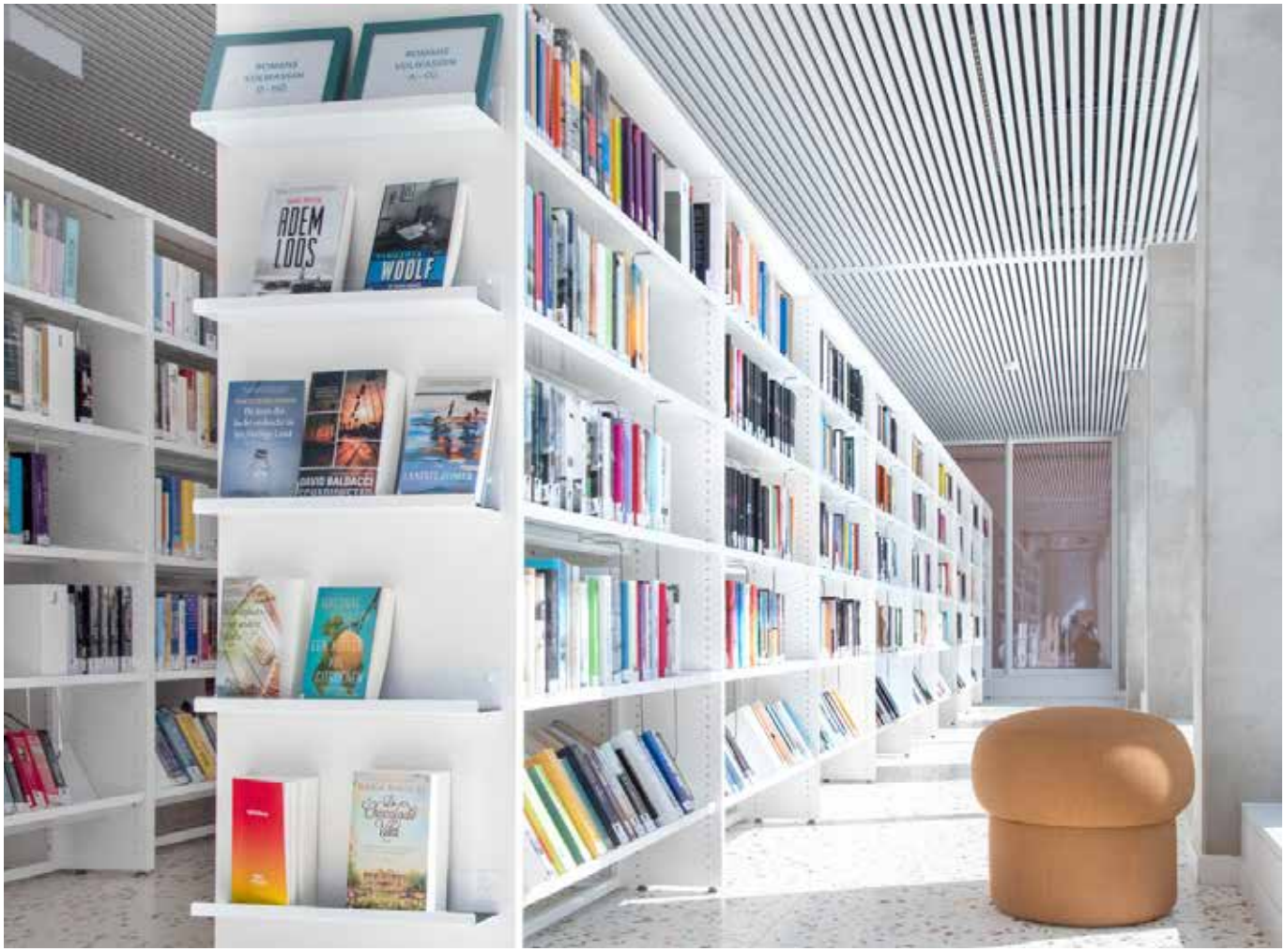
ADEM LOOS
WOOLF

LINGO SHELVING SYSTEM

CROSS BRACE - CASTOR PLATE - FOR OVERLAYING WOODEN TOP PLATE

LINGO SHELVING SYSTEM

CROSS BRACE - CASTOR PLATE - FOR OVERLAYING WOODEN TOP PLATE
F14300/F14301/F14302

Shelving system with wooden panels, cross brace and castor plate.
To be used with overlaying top plate.
Middle shelf must be screwed into panels for bays above 920 mm.

- For overlaying top plate, see page 131-137.
- For shelves, see page 138-169.
- For accessories, see page 170-186.

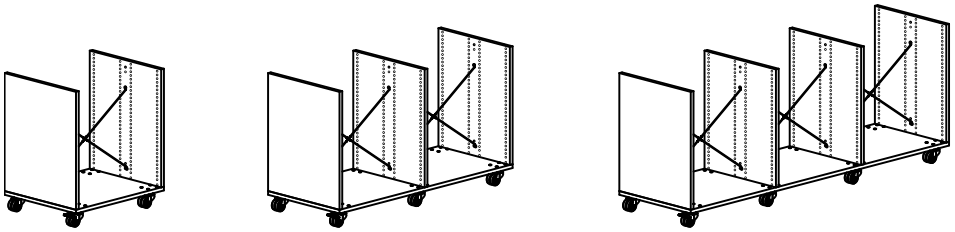

Double-sided H920 mm - 1/2/3 bays

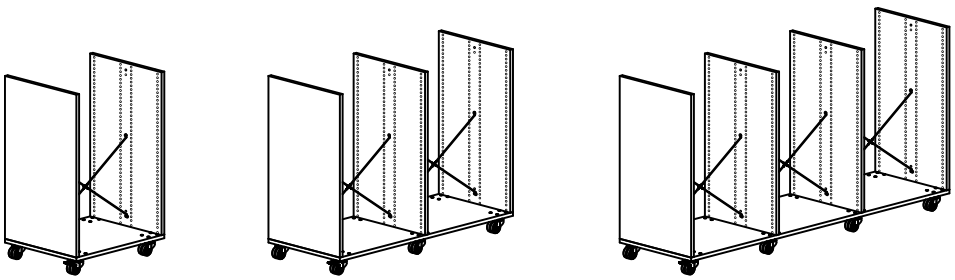

Double-sided H1220 mm - 1/2/3 bays

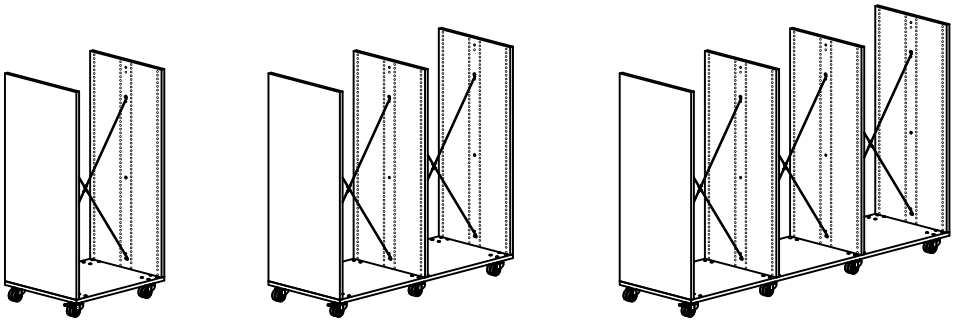

Double-sided H1520 mm - 1/2/3 bays

LINGO SHELVING SYSTEM

DOUBLE-SIDED - CROSS BRACE - CASTOR PLATE - FOR OVERLAYING WOODEN TOP PLATE

Painted and veneered Lingo Shelving Systems are FSC-certified.

H920 mm

Module mm	Shelf depth mm	No. of bays	Item no.	Melamine F14300	Painted F14301	Veneer F14302
500	250	1	F143xx2211100000000	-	-	-
500	250	2	F143xx2212100000000	-	-	-
500	250	3	F143xx2213100000000	-	-	-
500	300	1	F143xx2311100000000	-	-	-
500	300	2	F143xx2312100000000	-	-	-
500	300	3	F143xx2313100000000	-	-	-
500	400	1	F143xx2511100000000	-	-	-
500	400	2	F143xx2512100000000	-	-	-
500	400	3	F143xx2513100000000	-	-	-
750	250	1	F143xx2221100000000	-	-	-
750	250	2	F143xx2222100000000	-	-	-
750	250	3	F143xx2223100000000	-	-	-
750	300	1	F143xx2321100000000	-	-	-
750	300	2	F143xx2322100000000	-	-	-
750	300	3	F143xx2323100000000	-	-	-
750	400	1	F143xx2521100000000	-	-	-
750	400	2	F143xx2522100000000	-	-	-
750	400	3	F143xx2523100000000	-	-	-
900	250	1	F143xx2231100000000	-	-	-
900	250	2	F143xx2232100000000	-	-	-
900	300	1	F143xx2331100000000	-	-	-
900	300	2	F143xx2332100000000	-	-	-
900	400	1	F143xx2531100000000	-	-	-
900	400	2	F143xx2532100000000	-	-	-
1000	250	1	F143xx2241100000000	-	-	-
1000	250	2	F143xx2242100000000	-	-	-
1000	300	1	F143xx2341100000000	-	-	-
1000	300	2	F143xx2342100000000	-	-	-
1000	400	1	F143xx2541100000000	-	-	-
1000	400	2	F143xx2542100000000	-	-	-

LINGO SHELVING SYSTEM

DOUBLE-SIDED - CROSS BRACE - CASTOR PLATE - FOR OVERLAYING WOODEN TOP PLATE

Painted and veneered Lingo Shelving Systems are FSC-certified.

H1220 mm

Module mm	Shelf depth mm	No. of bays	Item no.	Melamine F14300	Painted F14301	Veneer F14302
500	250	1	F143xx3211100000000	-	-	-
500	250	2	F143xx3212100000000	-	-	-
500	250	3	F143xx3213100000000	-	-	-
500	300	1	F143xx3311100000000	-	-	-
500	300	2	F143xx3312100000000	-	-	-
500	300	3	F143xx3313100000000	-	-	-
500	400	1	F143xx3511100000000	-	-	-
500	400	2	F143xx3512100000000	-	-	-
500	400	3	F143xx3513100000000	-	-	-
750	250	1	F143xx3221100000000	-	-	-
750	250	2	F143xx3222100000000	-	-	-
750	250	3	F143xx3223100000000	-	-	-
750	300	1	F143xx3321100000000	-	-	-
750	300	2	F143xx3322100000000	-	-	-
750	300	3	F143xx3323100000000	-	-	-
750	400	1	F143xx3521100000000	-	-	-
750	400	2	F143xx3522100000000	-	-	-
750	400	3	F143xx3523100000000	-	-	-
900	250	1	F143xx3231100000000	-	-	-
900	250	2	F143xx3232100000000	-	-	-
900	300	1	F143xx3331100000000	-	-	-
900	300	2	F143xx3332100000000	-	-	-
900	400	1	F143xx3531100000000	-	-	-
900	400	2	F143xx3532100000000	-	-	-
1000	250	1	F143xx3241100000000	-	-	-
1000	250	2	F143xx3242100000000	-	-	-
1000	300	1	F143xx3341100000000	-	-	-
1000	300	2	F143xx3342100000000	-	-	-
1000	400	1	F143xx3541100000000	-	-	-
1000	400	2	F143xx3542100000000	-	-	-

LINGO SHELVING SYSTEM

DOUBLE-SIDED - CROSS BRACE - CASTOR PLATE - FOR OVERLAYING WOODEN TOP PLATE

Painted and veneered Lingo Shelving Systems are FSC-certified.

H1520 mm

Module mm	Shelf depth mm	No. of bays	Item no.	Melamine F14300	Painted F14301	Veneer F14302
500	250	1	F143xx4211100000000	-	-	-
500	250	2	F143xx4212100000000	-	-	-
500	250	3	F143xx4213100000000	-	-	-
500	300	1	F143xx4311100000000	-	-	-
500	300	2	F143xx4312100000000	-	-	-
500	300	3	F143xx4313100000000	-	-	-
500	400	1	F143xx4511100000000	-	-	-
500	400	2	F143xx4512100000000	-	-	-
500	400	3	F143xx4513100000000	-	-	-
750	250	1	F143xx4221100000000	-	-	-
750	250	2	F143xx4222100000000	-	-	-
750	250	3	F143xx4223100000000	-	-	-
750	300	1	F143xx4321100000000	-	-	-
750	300	2	F143xx4322100000000	-	-	-
750	300	3	F143xx4323100000000	-	-	-
750	400	1	F143xx4521100000000	-	-	-
750	400	2	F143xx4522100000000	-	-	-
750	400	3	F143xx4523100000000	-	-	-
900	250	1	F143xx4231100000000	-	-	-
900	250	2	F143xx4232100000000	-	-	-
900	300	1	F143xx4331100000000	-	-	-
900	300	2	F143xx4332100000000	-	-	-
900	400	1	F143xx4531100000000	-	-	-
900	400	2	F143xx4532100000000	-	-	-
1000	250	1	F143xx4241100000000	-	-	-
1000	250	2	F143xx4242100000000	-	-	-
1000	300	1	F143xx4341100000000	-	-	-
1000	300	2	F143xx4342100000000	-	-	-
1000	400	1	F143xx4541100000000	-	-	-
1000	400	2	F143xx4542100000000	-	-	-

BCI

LINGO SQUARE

LINGO SQUARE

WITH PLINTH
F49000/F49001/F49002

Lingo Square can be used in different environments for display, storage and exhibition. The top plate (also available in laminate) can also serve as a worktable, display or a play area. Each configuration consists of end panels, back panels, top and bottom plate, plinth and fittings. Painted and veneered Lingo Squares are FSC-certified. For shelves see from page 138, for accessories see from page 170.

H920 (939 mm) - for 2 shelves

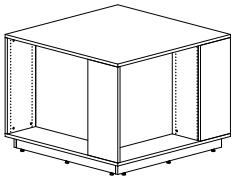

Module mm	Shelf depth mm	Total width mm	Item no.	Melamine F49000	Painted F49001	Veneer F49002
500	250	811	F490xx221000	-	-	-
500	300	861	F490xx231000	-	-	-
750	250	1061	F490xx222000	-	-	-
750	300	1111	F490xx232000	-	-	-
900	250	1211	F490xx223000	-	-	-
900	300	1261	F490xx233000	-	-	-

H1220 (1239 mm) - for 3 shelves

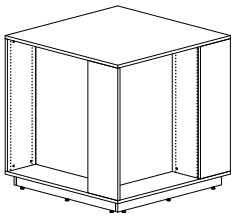

Module mm	Shelf depth mm	Total width mm	Item no.	Melamine F49000	Painted F49001	Veneer F49002
500	250	811	F490xx321000	-	-	-
500	300	861	F490xx331000	-	-	-
750	250	1061	F490xx322000	-	-	-
750	300	1111	F490xx332000	-	-	-
900	250	1211	F490xx323000	-	-	-
900	300	1261	F490xx333000	-	-	-

H1520 (1539 mm) - for 4 shelves

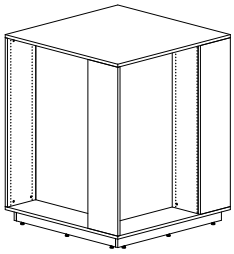

Module mm	Shelf depth mm	Total width mm	Item no.	Melamine F49000	Painted F49001	Veneer F49002
500	250	811	F490xx421000	-	-	-
500	300	861	F490xx431000	-	-	-
750	250	1061	F490xx422000	-	-	-
750	300	1111	F490xx432000	-	-	-
900	250	1211	F490xx423000	-	-	-
900	300	1261	F490xx433000	-	-	-

H1820 (1839 mm) - for 5 shelves

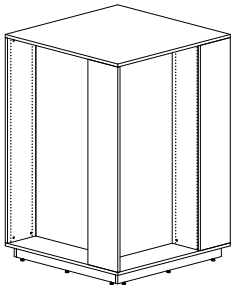

Module mm	Shelf depth mm	Total width mm	Item no.	Melamine F49000	Painted F49001	Veneer F49002
500	250	811	F490xx521000	-	-	-
500	300	861	F490xx531000	-	-	-
750	250	1061	F490xx522000	-	-	-
750	300	1111	F490xx532000	-	-	-
900	250	1211	F490xx523000	-	-	-
900	300	1261	F490xx533000	-	-	-

LINGO SQUARE

LINGO SQUARE

WITH CASTORS
F49003/F49004/F49005

Lingo Square can be used in different environments for display, storage and exhibition. The top plate (available in laminate) can also serve as a worktable, display or a play area. Each configuration consists of end panels, back panels, top and bottom plate, 8 castors (Ø75 mm, 2 with brakes) and fittings. Painted and veneered Lingo Squares are FSC-certified. For shelves see from page 138, for accessories see from page 170.

H920 (939 mm) - for 2 shelves

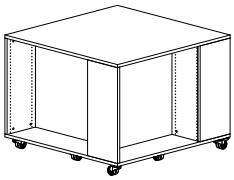

Module mm	Shelf depth mm	Total width mm	Item no.	Melamine F49003	Painted F49004	Veneer F49005
500	250	811	F490xx221000	-	-	-
500	300	861	F490xx231000	-	-	-
750	250	1061	F490xx222000	-	-	-
750	300	1111	F490xx232000	-	-	-
900	250	1211	F490xx223000	-	-	-
900	300	1261	F490xx233000	-	-	-

H1220 (1239 mm) - for 3 shelves

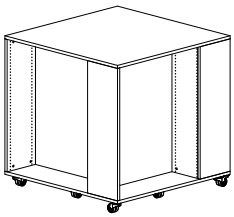

Module mm	Shelf depth mm	Total width mm	Item no.	Melamine F49003	Painted F49004	Veneer F49005
500	250	811	F490xx321000	-	-	-
500	300	861	F490xx331000	-	-	-
750	250	1061	F490xx322000	-	-	-
750	300	1111	F490xx332000	-	-	-
900	250	1211	F490xx323000	-	-	-
900	300	1261	F490xx333000	-	-	-

H1520 (1539 mm) - for 4 shelves

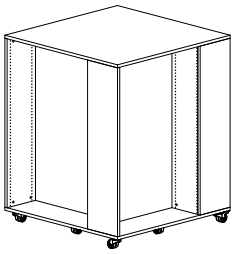

Module mm	Shelf depth mm	Total width mm	Item no.	Melamine F49003	Painted F49004	Veneer F49005
500	250	811	F490xx421000	-	-	-
500	300	861	F490xx431000	-	-	-
750	250	1061	F490xx422000	-	-	-
750	300	1111	F490xx432000	-	-	-
900	250	1211	F490xx423000	-	-	-
900	300	1261	F490xx433000	-	-	-

H1820 (1839 mm) - for 5 shelves

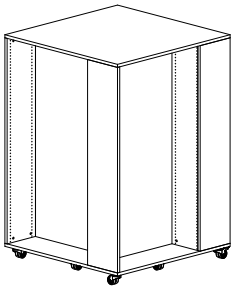

Module mm	Shelf depth mm	Total width mm	Item no.	Melamine F49003	Painted F49004	Veneer F49005
500	250	811	F490xx521000	-	-	-
500	300	861	F490xx531000	-	-	-
750	250	1061	F490xx522000	-	-	-
750	300	1111	F490xx532000	-	-	-
900	250	1211	F490xx523000	-	-	-
900	300	1261	F490xx533000	-	-	-

SHELVES

ST1 & ST2 STEEL TOP SHELVES

ST1 STEEL TOP SHELF

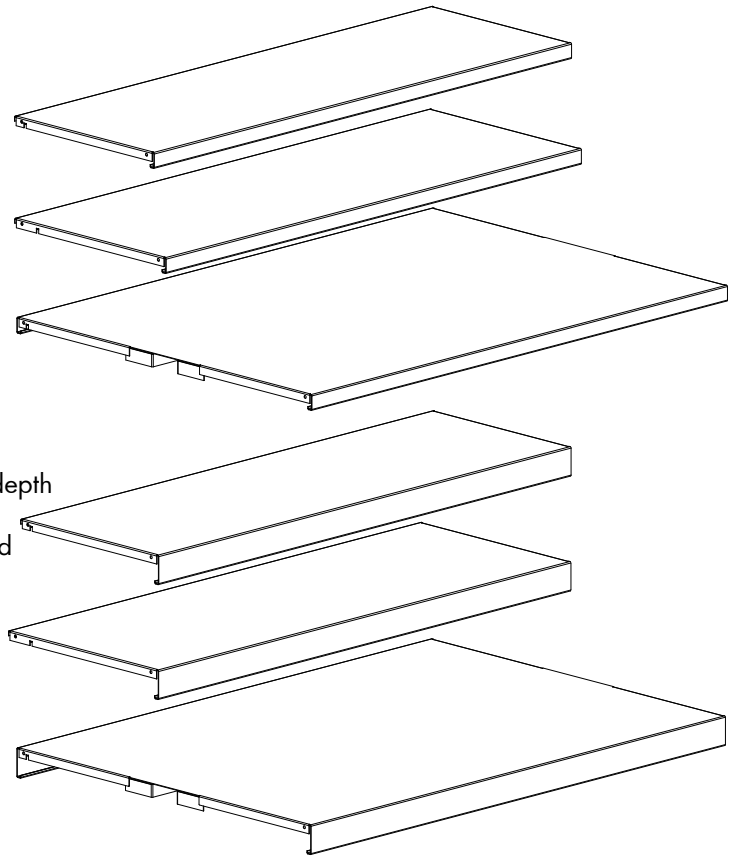

Details:
- Module 500/750/900/1000 mm
- Depth 250/300/400 mm
- Single-sided standard depth
  Single-sided full depth
  Double-sided
- With 25/47 mm frontedge
- Brackets and screws
- Max. weight 25 kg.

Use with:
- SI1 steel intermediate shelf for backedge book support
- WP1/2/5/6 - wooden panel
- WBP1/WBP3 - wooden back panel for ST1 standard depth
  WBP2/WBP4 wooden back panel for ST1 full depth
  WBP2/WBP4 wooden back panel for ST1 double-sided

ST2 - STEEL TOP SHELF

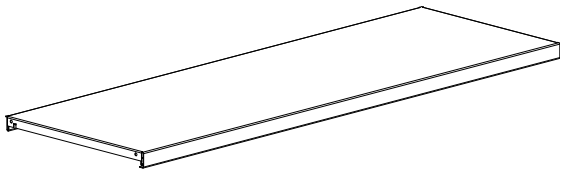

Details:
- Module 500/750/900/1000 mm
- Depth 250/300/400 mm
- Single-sided
- With 25 mm frontedge
- Brackets and screws
- Hanging book support
- Max. weight 80 kg

Use with:
- SI2 steel intermediate shelf for hanging book support
- WP1/2/5/6 - wooden panel
- WBP1/3 - wooden back panel

ST4 STEEL TOP SHELF

Details:
- Module 500/750/900/1000 mm
- Depth 250/300/400 mm
- Single-sided
- With 25 mm frontedge and 50 mm clip-on label holder
- Screws and spacer
- Hanging book support
- Max. weight 80 kg.

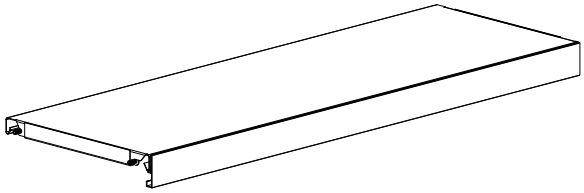

Use with:
- SI3/SI4 - steel shelf - for hanging book support
- WP1/2/5/6 - wooden panel
- WBP1/3 - wooden back panel

SHELVES

ST1 STEEL TOP SHELF WITH H25 MM FRONTEDGE

ST1 - single-sided steel top shelf with H25 mm frontedge and brackets - standard depth

To be used with SI1.

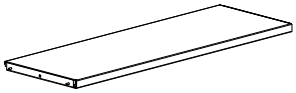

Module mm	Shelf depth mm	Item no.	
500	250	F1440021	-
500	300	F1440031	-
500	400	F1440051	-
750	250	F1440022	-
750	300	F1440032	-
750	400	F1440052	-
900	250	F1440023	-
900	300	F1440033	-
900	400	F1440053	-
1000	250	F1440024	-
1000	300	F1440034	-
1000	400	F1440054	-

ST1 - single-sided steel top shelf with H25 mm frontedge - standard depth

Brackets must be ordered separately. To be used with SI1.

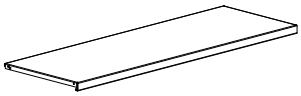

Module mm	Shelf depth mm	Item no.	
500	250	S1431021	-
500	300	S1431031	-
500	400	S1431051	-
750	250	S1431022	-
750	300	S1431032	-
750	400	S1431052	-
900	250	S1431023	-
900	300	S1431033	-
900	400	S1431053	-
1000	250	S1431024	-
1000	300	S1431034	-
1000	400	S1431054	-

Steel bracket - for ST1

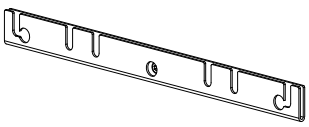

Shelf depth mm	Item no.	
250	S147202	-
300	S147203	-
400	S147205	-

Shelf bridge - for ST1

Used to minimize gap between ST1on double-sided shelving.

Module mm	Item no.	
500	S149531	-
750	S149532	-
900	S149533	-
1000	S149534	-

ST1 - single-sided steel top shelf with H25 mm frontedge and brackets - full depth

To be used with SI1. Only for single-sided shelving.

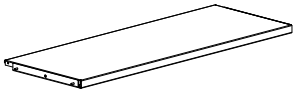

Module mm	Shelf depth mm	Item no.	
500	250	F1440121	-
500	300	F1440131	-
500	400	F1440151	-
750	250	F1440122	-
750	300	F1440132	-
750	400	F1440152	-
900	250	F1440123	-
900	300	F1440133	-
900	400	F1440153	-
1000	250	F1440124	-
1000	300	F1440134	-
1000	400	F1440154	-

ST1 - single-sided steel top shelf with H25 mm frontedge - full depth

Brackets must be ordered separately. To be used with SI1.Only for single-sided shelving.

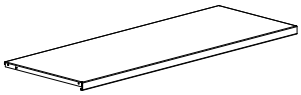

Module mm	Shelf depth mm	Item no.	
500	250	S1431121	-
500	300	S1431131	-
500	400	S1431151	-
750	250	S1431122	-
750	300	S1431132	-
750	400	S1431152	-
900	250	S1431123	-
900	300	S1431133	-
900	400	S1431153	-
1000	250	S1431124	-
1000	300	S1431134	-
1000	400	S1431154	-

Steel bracket - for ST1

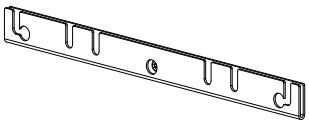

Shelf depth mm	Item no.	
250	S147202	-
300	S147203	-
400	S147205	-

Shelf bridge - for ST1

Used to minimize gap between ST1on double-sided shelving.

Module mm	Item no.	
500	S149531	-
750	S149532	-
900	S149533	-
1000	S149534	-

SHELVES

ST1 STEEL TOP SHELF WITH H25 MM FRONTEDGE

ST1 - double-sided steel top shelf with H25 mm frontedge and brackets

To be used with SI1.

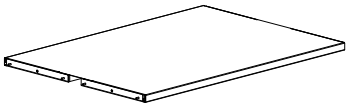

Module mm	Shelf depth mm	Item no.	
500	250	F1440221	-
500	300	F1440231	-
500	400	F1440251	-
750	250	F1440222	-
750	300	F1440232	-
750	400	F1440252	-
900	250	F1440223	-
900	300	F1440233	-
900	400	F1440253	-
1000	250	F1440224	-
1000	300	F1440234	-
1000	400	F1440254	-

ST1 - double-sided steel top shelf with H25 mm frontedge

Brackets must be ordered separately. To be used with SI1.

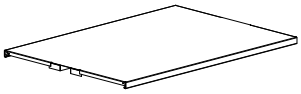

Module mm	Shelf depth mm	Item no.	
500	250	S1431221	-
500	300	S1431231	-
500	400	S1431251	-
750	250	S1431222	-
750	300	S1431232	-
750	400	S1431252	-
900	250	S1431223	-
900	300	S1431233	-
900	400	S1431253	-
1000	250	S1431224	-
1000	300	S1431234	-
1000	400	S1431254	-

Steel bracket - for ST1

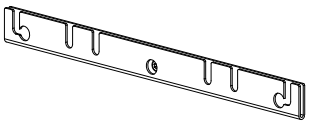

Shelf depth mm	Item no.	
250	S147202	-
300	S147203	-
400	S147205	-

Shelf bridge - for ST1

Used to minimize gap between ST1on double-sided shelving.

Module mm	Item no.	
500	S149531	-
750	S149532	-
900	S149533	-
1000	S149534	-

ST1 - single-sided steel top shelf with H47 mm frontedge and brackets - standard depth

To be used with SI1.

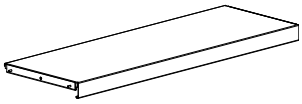

Module mm	Shelf depth mm	Item no.	
500	250	F1440321	-
500	300	F1440331	-
500	400	F1440351	-
750	250	F1440322	-
750	300	F1440332	-
750	400	F1440352	-
900	250	F1440323	-
900	300	F1440333	-
900	400	F1440353	-
1000	250	F1440324	-
1000	300	F1440334	-
1000	400	F1440354	-

ST1 - single-sided steel top shelf with H47 mm frontedge - standard depth

Brackets must be ordered separately. To be used with SI1.

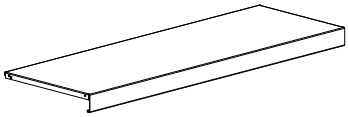

Module mm	Shelf depth mm	Item no.	
500	250	S1431321	-
500	300	S1431331	-
500	400	S1431351	-
750	250	S1431322	-
750	300	S1431332	-
750	400	S1431352	-
900	250	S1431323	-
900	300	S1431333	-
900	400	S1431353	-
1000	250	S1431324	-
1000	300	S1431334	-
1000	400	S1431354	-

Steel bracket - for ST1

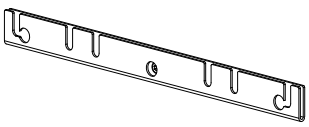

Shelf depth mm	Item no.	
250	S147202	-
300	S147203	-
400	S147205	-

Shelf bridge - for ST1

Used to minimize gap between ST1on double-sided shelving.

Module mm	Item no.	
500	S149531	-
750	S149532	-
900	S149533	-
1000	S149534	-

SHELVES

ST1 STEEL TOP SHELF WITH H47 MM FRONTEDGE

ST1 - single-sided steel top shelf with H47 mm frontedge and brackets - full depth

To be used with SI1. Only for single-sided shelving.

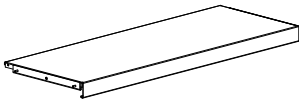

Module mm	Shelf depth mm	Item no.	
500	250	F1440421	-
500	300	F1440431	-
500	400	F1440451	-
750	250	F1440422	-
750	300	F1440432	-
750	400	F1440452	-
900	250	F1440423	-
900	300	F1440433	-
900	400	F1440453	-
1000	250	F1440424	-
1000	300	F1440434	-
1000	400	F1440454	-

ST1 - single-sided steel top shelf with H47 mm frontedge - full depth

Brackets must be ordered separately. To be used with SI1. Only for single-sided shelving.

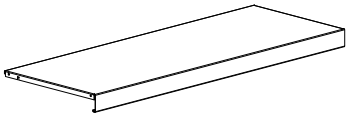

Module mm	Shelf depth mm	Item no.	
500	250	S1431421	-
500	300	S1431431	-
500	400	S1431451	-
750	250	S1431422	-
750	300	S1431432	-
750	400	S1431452	-
900	250	S1431423	-
900	300	S1431433	-
900	400	S1431453	-
1000	250	S1431424	-
1000	300	S1431434	-
1000	400	S1431454	-

Steel bracket - for ST1

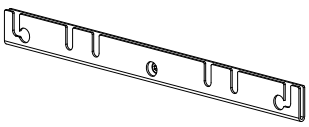

Shelf depth mm	Item no.	
250	S147202	-
300	S147203	-
400	S147205	-

Shelf bridge - for ST1

Used to minimize gap between ST1on double-sided shelving.

Module mm	Item no.	
500	S149531	-
750	S149532	-
900	S149533	-
1000	S149534	-

ST1 - double-sided steel top shelf with H47 mm frontedge and brackets

To be used with SI1.

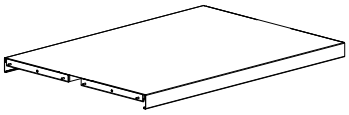

Module mm	Shelf depth mm	Item no.	
500	250	F1440521	-
500	300	F1440531	-
500	400	F1440551	-
750	250	F1440522	-
750	300	F1440532	-
750	400	F1440552	-
900	250	F1440523	-
900	300	F1440533	-
900	400	F1440553	-
1000	250	F1440524	-
1000	300	F1440534	-
1000	400	F1440554	-

ST1 - double-sided steel top shelf with H47 mm frontedge

Brackets must be ordered separately. To be used with SI1.

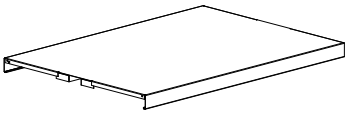

Module mm	Shelf depth mm	Item no.	
500	250	S1431521	-
500	300	S1431531	-
500	400	S1431551	-
750	250	S1431522	-
750	300	S1431532	-
750	400	S1431552	-
900	250	S1431523	-
900	300	S1431533	-
900	400	S1431553	-
1000	250	S1431524	-
1000	300	S1431534	-
1000	400	S1431554	-

Steel bracket - for ST1

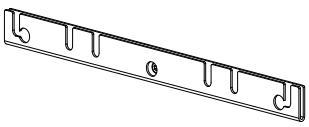

Shelf depth mm	Item no.	
250	S147202	-
300	S147203	-
400	S147205	-

Shelf bridge - for ST1

Used to minimize gap between ST1on double-sided shelving.

Module mm	Item no.	
500	S149531	-
750	S149532	-
900	S149533	-
1000	S149534	-

SHELVES

ST2 STEEL TOP SHELF

ST2 - single-sided steel top shelf with brackets - standard depth - for hanging book support

To be used with SI2.

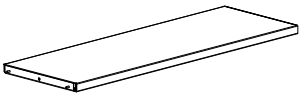

Module mm	Shelf depth mm	Item no.	
500	250	F1440721	-
500	300	F1440731	-
500	400	F1440751	-
750	250	F1440722	-
750	300	F1440732	-
750	400	F1440752	-
900	250	F1440723	-
900	300	F1440733	-
900	400	F1440753	-
1000	250	F1440724	-
1000	300	F1440734	-
1000	400	F1440754	-

ST2 - single-sided steel top shelf - standard depth - for hanging book support

Brackets must be ordered separately. To be used with SI2.

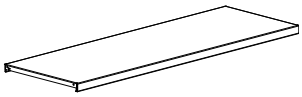

Module mm	Shelf depth mm	Item no.	
500	250	S1431621	-
500	300	S1431631	-
500	400	S1431651	-
750	250	S1431622	-
750	300	S1431632	-
750	400	S1431652	-
900	250	S1431623	-
900	300	S1431633	-
900	400	S1431653	-
1000	250	S1431624	-
1000	300	S1431634	-
1000	400	S1431654	-

Steel bracket - for ST2

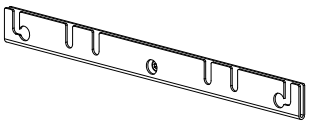

Shelf depth mm	Item no.	
250	S147202	-
300	S147203	-
400	S147205	-

Hanging book support - for ST2

Available in chrome steel or standard steel colours.

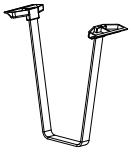

Type	Height mm	Item no.	
Normal	200	S017775K	-
Folio	250	S017776Y	-

Shelf bridge - for ST2

Used to minimize gap between ST2 on double-sided shelving.

Module	Item no.	
500	S149541	-
750	S149542	-
900	S149543	-
1000	S149544	-

SHELVES

ST4 STEEL TOP SHELF WITH CLIP-ON LABEL HOLDER

ST4 - single-sided steel top shelf with screws, spacer and clip on label holder - for hanging book support

H50 mm plastic clip-on label holder.

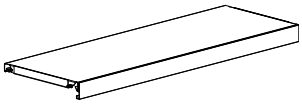

Module mm	Shelf depth mm	Item no.	
500	250	F1440821	-
500	300	F1440831	-
500	400	F1440851	-
750	250	F1440822	-
750	300	F1440832	-
750	400	F1440852	-
900	250	F1440823	-
900	300	F1440833	-
900	400	F1440853	-
1000	250	F1440824	-
1000	300	F1440834	-
1000	400	F1440854	-

ST4 - single-sided steel shelf with screws and spacer - for hanging book support

Steel shelf can be used as steel top shelf.

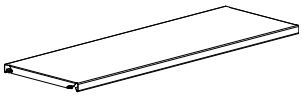

Module mm	Shelf depth mm	Item no.	
500	250	S1431721	-
500	300	S1431731	-
500	400	S1431751	-
750	250	S1431722	-
750	300	S1431732	-
750	400	S1431752	-
900	250	S1431723	-
900	300	S1431733	-
900	400	S1431753	-
1000	250	S1431724	-
1000	300	S1431734	-
1000	400	S1431754	-

Hanging book support - for ST4 & SI4

Chromed round steel with unbreakable plastic sliders. Easy adjustable.

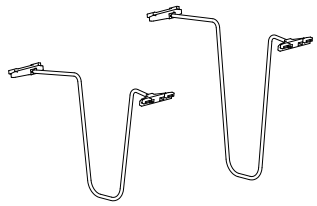

Height mm	Shelf depth mm	Item no.	
220	250	S01779642	-
220	300	S01779643	-
280	250	S017797S2	-
280	300	S017797S3	-

REGIS SÖREN
DET SMALTER

SHELVES

WT1/WT2/WT3 - WOODEN TOP SHELVES

WT1/WT2/WT3 WOODEN TOP SHELF

Details:
- Module 500/750/900/1000 mm
- Depth 250/300/400 mm
- Melamine/painted/veneer
- Single-sided standard depth
  Single-sided full depth
  Double-sided
- Snapfix and screws
- Melamine: chipbboard
  Painted: MFC
  Veneer: chipboard

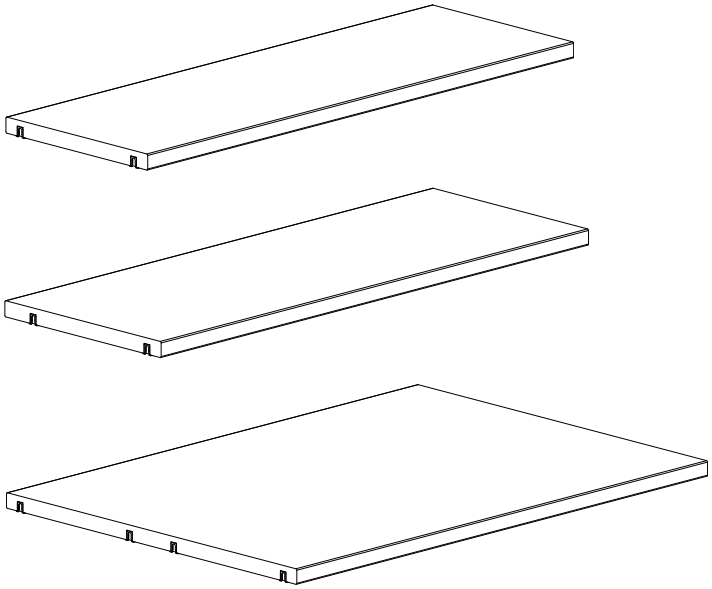

Use with:
- SI1/SI2/SI3/SI4 - steel shelves
- WI1/WI2/WI3/WI4 wooden shelves
- WP1/2/5/6 - wooden panel
- WBP1/WBP3 - wooden back panel for standard depth
  WBP2/WBP4 wooden back panel for full depth
  WBP2/WBP4 wooden back panel for double-sided

Note:
- Wooden top shelves must always be fixed with snapfix and screws.

Painted and veneered shelves are FSC-certified.

WT1 - single-sided wooden top shelf - standard depth

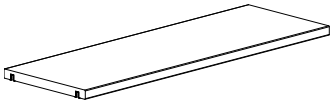

Incl. fittings (snapfix and screws).	Module mm	Shelf depth mm	Item no.	Melamine S14450	Painted S14451	Veneer S14452
	500	250	S144xx21	-	-	-
	500	300	S144xx31	-	-	-
	500	400	S144xx51	-	-	-
	750	250	S144xx22	-	-	-
	750	300	S144xx32	-	-	-
	750	400	S144xx52	-	-	-
	900	250	S144xx23	-	-	-
	900	300	S144xx33	-	-	-
	900	400	S144xx53	-	-	-
	1000	250	S144xx24	-	-	-
	1000	300	S144xx34	-	-	-
	1000	400	S144xx54	-	-	-

WT2 - single-sided wooden top shelf - full depth

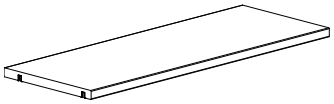

Incl. fittings (snapfix and screws).	Module mm	Shelf depth mm	Item no.	Melamine S14456	Painted S14457	Veneer S14458
	500	250 = 280	S144xx21	-	-	-
	500	300 = 330	S144xx31	-	-	-
	500	400 = 430	S144xx51	-	-	-
	750	250 = 280	S144xx22	-	-	-
	750	300 = 330	S144xx32	-	-	-
	750	400 = 430	S144xx52	-	-	-
	900	250 = 280	S144xx23	-	-	-
	900	300 = 330	S144xx33	-	-	-
	900	400 = 430	S144xx53	-	-	-
	1000	250 = 280	S144xx24	-	-	-
	1000	300 = 330	S144xx34	-	-	-
	1000	400 = 430	S144xx54	-	-	-

WT3 - double-sided wooden top shelf

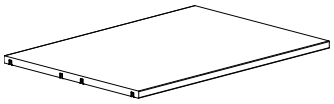

Incl. fittings (snapfix and screws).	Module mm	Shelf depth mm	Item no.	Melamine S14462	Painted S14463	Veneer S14464
	500	2 x 250 = 537	S144xx21	-	-	-
	500	2 x 300 = 637	S144xx31	-	-	-
	500	2 x 400 = 837	S144xx51	-	-	-
	750	2 x 250 = 537	S144xx22	-	-	-
	750	2 x 300 = 637	S144xx32	-	-	-
	750	2 x 400 = 837	S144xx52	-	-	-
	900	2 x 250 = 537	S144xx23	-	-	-
	900	2 x 300 = 637	S144xx33	-	-	-
	900	2 x 400 = 837	S144xx53	-	-	-
	1000	2 x 250 = 537	S144xx24	-	-	-
	1000	2 x 300 = 637	S144xx34	-	-	-
	1000	2 x 400 = 837	S144xx54	-	-	-

WC
AVI
uitgeleend

T-Z
R-T

WO1 - WOODEN OVERLAYING TOP PLATE

Details:
- Module 500/750/900/100 mm
- Depth 250/300/400 mm
- Melamine/painted/veneer
- Single-/double-sided
- Freestanding/outer/intermediate
- Max. weight 25 kg.
- Melamine: chipbboard
  Painted: MFC
  Veneer: chipboard

Use with:
- S1/SI2/SI3/SI4 - steel shelves
- WI1/WI2/WI3/WI4 wooden shelves
- WP3/4/7/8 - wooden panel
- WBP1/3 - wooden back panel

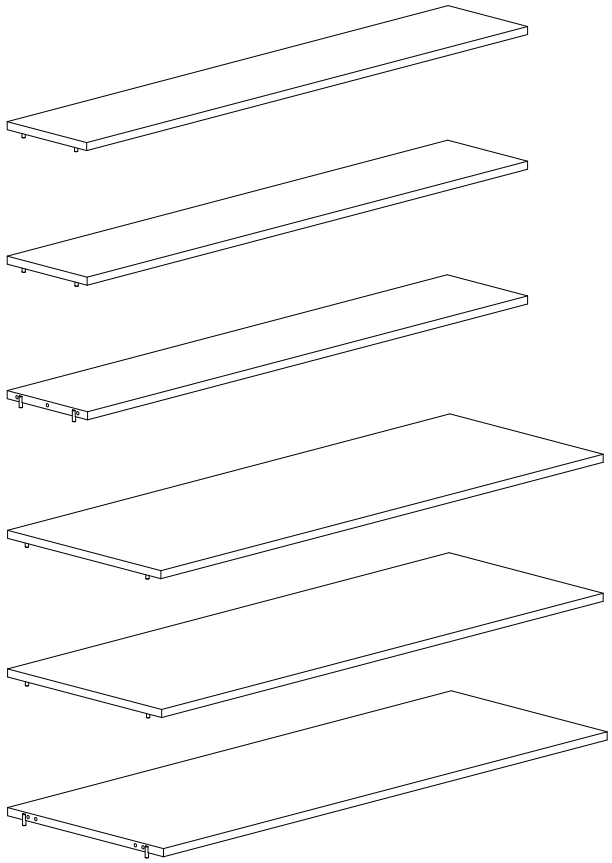

SHELVES

WO1 WOODEN OVERLAYING TOP PLATE - SINGLE-SIDED

Painted and veneered shelves are FSC-certified.

WO1 - single-sided wooden overlaying top plate - freestanding

Incl. fittings.

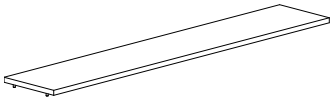

Module mm	Shelf depth mm	No. of bays	Item no.	Melamine S14400	Painted S14401	Veneer S14402
500	250	1	S144xx21161	-	-	-
500	250	2	S144xx21162	-	-	-
500	250	3	S144xx21163	-	-	-
500	300	1	S144xx31161	-	-	-
500	300	2	S144xx31162	-	-	-
500	300	3	S144xx31163	-	-	-
500	400	1	S144xx51161	-	-	-
500	400	2	S144xx51162	-	-	-
500	400	3	S144xx51163	-	-	-
750	250	1	S144xx22161	-	-	-
750	250	2	S144xx22162	-	-	-
750	250	3	S144xx22163	-	-	-
750	300	1	S144xx32161	-	-	-
750	300	2	S144xx32162	-	-	-
750	300	3	S144xx32163	-	-	-
750	400	1	S144xx52161	-	-	-
750	400	2	S144xx52162	-	-	-
750	400	3	S144xx52163	-	-	-
900	250	1	S144xx23161	-	-	-
900	250	2	S144xx23162	-	-	-
900	300	1	S144xx33161	-	-	-
900	300	2	S144xx33162	-	-	-
900	400	1	S144xx53161	-	-	-
900	400	2	S144xx53162	-	-	-
1000	250	1	S144xx24161	-	-	-
1000	250	2	S144xx24162	-	-	-
1000	300	1	S144xx34161	-	-	-
1000	300	2	S144xx34162	-	-	-
1000	400	1	S144xx54161	-	-	-
1000	400	2	S144xx54162	-	-	-

Painted and veneered shelves are FSC-certified.

WO1 - single-sided wooden overlaying top plate - outer

Incl. fittings.

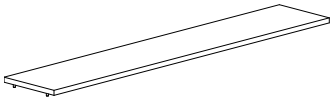

Module mm	Shelf depth mm	No. of bays	Item no.	Melamine S14400	Painted S14401	Veneer S14402
500	250	1	S144xx21141	-	-	-
500	250	2	S144xx21142	-	-	-
500	250	3	S144xx21143	-	-	-
500	300	1	S144xx31141	-	-	-
500	300	2	S144xx31142	-	-	-
500	300	3	S144xx31143	-	-	-
500	400	1	S144xx51141	-	-	-
500	400	2	S144xx51142	-	-	-
500	400	3	S144xx51143	-	-	-
750	250	1	S144xx22141	-	-	-
750	250	2	S144xx22142	-	-	-
750	250	3	S144xx22143	-	-	-
750	300	1	S144xx32141	-	-	-
750	300	2	S144xx32142	-	-	-
750	300	3	S144xx32143	-	-	-
750	400	1	S144xx52141	-	-	-
750	400	2	S144xx52142	-	-	-
750	400	3	S144xx52143	-	-	-
900	250	1	S144xx23141	-	-	-
900	250	2	S144xx23142	-	-	-
900	300	1	S144xx33141	-	-	-
900	300	2	S144xx33142	-	-	-
900	400	1	S144xx53141	-	-	-
900	400	2	S144xx53142	-	-	-
1000	250	1	S144xx24141	-	-	-
1000	250	2	S144xx24142	-	-	-
1000	300	1	S144xx34141	-	-	-
1000	300	2	S144xx34142	-	-	-
1000	400	1	S144xx54141	-	-	-
1000	400	2	S144xx54142	-	-	-

SHELVES

WO1 WOODEN OVERLAYING TOP PLATE - SINGLE-SIDED

Painted and veneered shelves are FSC-certified.

WO1 - single-sided wooden overlaying top plate - intermediate

Incl. fittings.

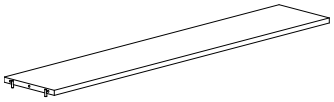

Module mm	Shelf depth mm	No. of bays	Item no.	Melamine S14400	Painted S14401	Veneer S14402
500	250	1	S144xx21131	-	-	-
500	250	2	S144xx21132	-	-	-
500	250	3	S144xx21133	-	-	-
500	300	1	S144xx31131	-	-	-
500	300	2	S144xx31132	-	-	-
500	300	3	S144xx31133	-	-	-
500	400	1	S144xx51131	-	-	-
500	400	2	S144xx51132	-	-	-
500	400	3	S144xx51133	-	-	-
750	250	1	S144xx22131	-	-	-
750	250	2	S144xx22132	-	-	-
750	250	3	S144xx22133	-	-	-
750	300	1	S144xx32131	-	-	-
750	300	2	S144xx32132	-	-	-
750	300	3	S144xx32133	-	-	-
750	400	1	S144xx52131	-	-	-
750	400	2	S144xx52132	-	-	-
750	400	3	S144xx52133	-	-	-
900	250	1	S144xx23131	-	-	-
900	250	2	S144xx23132	-	-	-
900	300	1	S144xx33131	-	-	-
900	300	2	S144xx33132	-	-	-
900	400	1	S144xx53131	-	-	-
900	400	2	S144xx53132	-	-	-
1000	250	1	S144xx24131	-	-	-
1000	250	2	S144xx24132	-	-	-
1000	300	1	S144xx34131	-	-	-
1000	300	2	S144xx34132	-	-	-
1000	400	1	S144xx54131	-	-	-
1000	400	2	S144xx54132	-	-	-

Painted and veneered shelves are FSC-certified.

WO1 - double-sided wooden overlaying top plate - freestanding

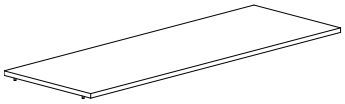

Incl. fittings.	Module mm	Shelf depth mm	No. of bays	Item no.	Melamine S14400	Painted S14401	Veneer S14402
	500	250	1	S144xx21261	-	-	-
	500	250	2	S144xx21262	-	-	-
	500	250	3	S144xx21263	-	-	-
	500	300	1	S144xx31261	-	-	-
	500	300	2	S144xx31262	-	-	-
	500	300	3	S144xx31263	-	-	-
	500	400	1	S144xx51261	-	-	-
	500	400	2	S144xx51262	-	-	-
	500	400	3	S144xx51263	-	-	-
	750	250	1	S144xx22261	-	-	-
	750	250	2	S144xx22262	-	-	-
	750	250	3	S144xx22263	-	-	-
	750	300	1	S144xx32261	-	-	-
	750	300	2	S144xx32262	-	-	-
	750	300	3	S144xx32263	-	-	-
	750	400	1	S144xx52261	-	-	-
	750	400	2	S144xx52262	-	-	-
	750	400	3	S144xx52263	-	-	-
	900	250	1	S144xx23261	-	-	-
	900	250	2	S144xx23262	-	-	-
	900	300	1	S144xx33261	-	-	-
	900	300	2	S144xx33262	-	-	-
	900	400	1	S144xx53261	-	-	-
	900	400	2	S144xx53262	-	-	-
	1000	250	1	S144xx24261	-	-	-
	1000	250	2	S144xx24262	-	-	-
	1000	300	1	S144xx34261	-	-	-
	1000	300	2	S144xx34262	-	-	-
	1000	400	1	S144xx54261	-	-	-
	1000	400	2	S144xx54262	-	-	-

SHELVES

WO1 WOODEN OVERLAYING TOP PLATE - DOUBLE-SIDED

Painted and veneered shelves are FSC-certified.

WO1 - double-sided wooden overlaying top plate - outer

Incl. fittings.

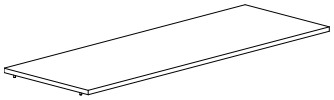

Module mm	Shelf depth mm	No. of bays	Item no.	Melamine S14400	Painted S14401	Veneer S14402
500	250	1	S144xx21241	-	-	-
500	250	2	S144xx21242	-	-	-
500	250	3	S144xx21243	-	-	-
500	300	1	S144xx31241	-	-	-
500	300	2	S144xx31242	-	-	-
500	300	3	S144xx31243	-	-	-
500	400	1	S144xx51241	-	-	-
500	400	2	S144xx51242	-	-	-
500	400	3	S144xx51243	-	-	-
750	250	1	S144xx22241	-	-	-
750	250	2	S144xx22242	-	-	-
750	250	3	S144xx22243	-	-	-
750	300	1	S144xx32241	-	-	-
750	300	2	S144xx32242	-	-	-
750	300	3	S144xx32243	-	-	-
750	400	1	S144xx52241	-	-	-
750	400	2	S144xx52242	-	-	-
750	400	3	S144xx52243	-	-	-
900	250	1	S144xx23241	-	-	-
900	250	2	S144xx23242	-	-	-
900	300	1	S144xx33241	-	-	-
900	300	2	S144xx33242	-	-	-
900	400	1	S144xx53241	-	-	-
900	400	2	S144xx53242	-	-	-
1000	250	1	S144xx24241	-	-	-
1000	250	2	S144xx24242	-	-	-
1000	300	1	S144xx34241	-	-	-
1000	300	2	S144xx34242	-	-	-
1000	400	1	S144xx54241	-	-	-
1000	400	2	S144xx54242	-	-	-

Painted and veneered shelves are FSC-certified.

WO1 - double-sided wooden overlaying top plate - intermediate

Incl. fittings.

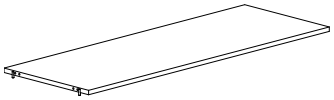

Module mm	Shelf depth mm	No. of bays	Item no.	Melamine S14400	Painted S14401	Veneer S14402
500	250	1	S144xx21231	-	-	-
500	250	2	S144xx21232	-	-	-
500	250	3	S144xx21233	-	-	-
500	300	1	S144xx31231	-	-	-
500	300	2	S144xx31232	-	-	-
500	300	3	S144xx31233	-	-	-
500	400	1	S144xx51231	-	-	-
500	400	2	S144xx51232	-	-	-
500	400	3	S144xx51233	-	-	-
750	250	1	S144xx22231	-	-	-
750	250	2	S144xx22232	-	-	-
750	250	3	S144xx22233	-	-	-
750	300	1	S144xx32231	-	-	-
750	300	2	S144xx32232	-	-	-
750	300	3	S144xx32233	-	-	-
750	400	1	S144xx52231	-	-	-
750	400	2	S144xx52232	-	-	-
750	400	3	S144xx52233	-	-	-
900	250	1	S144xx23231	-	-	-
900	250	2	S144xx23232	-	-	-
900	300	1	S144xx33231	-	-	-
900	300	2	S144xx33232	-	-	-
900	400	1	S144xx53231	-	-	-
900	400	2	S144xx53232	-	-	-
1000	250	1	S144xx24231	-	-	-
1000	250	2	S144xx24232	-	-	-
1000	300	1	S144xx34231	-	-	-
1000	300	2	S144xx34232	-	-	-
1000	400	1	S144xx54231	-	-	-
1000	400	2	S144xx54232	-	-	-

SHELVES

SI1 & SI2 STEEL INTERMEDIATE SHELVES

SI1 STEEL INTERMEDIATE SHELF WITH STEEL BACKEDGE - FOR BACKEDGE BOOK SUPPORT

Details:
- Module 500/750/900/1000 mm
- Depth 250/300/400 mm
- Steel backedge H47 mm
- Backedge book support
- Steel brackets
- Max. weight 80 kg.
- Straight and 45°/60° sloping

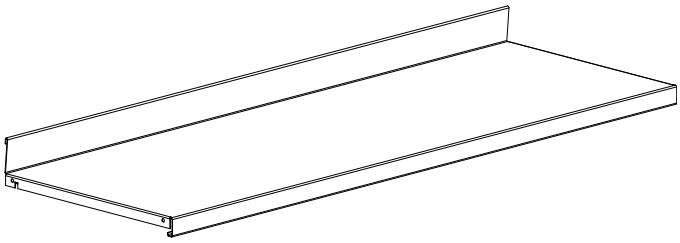

Use with:
- ST1 - steel top shelf
- WT1/WT2/WT3 - wooden top shelf
- WO1 - wooden overlaying top plate

Note:
- The middle shelf must be screwed into panels for bays with cross brace above 920 mm.

SI2 STEEL INTERMEDIATE SHELF WITH ACRYLIC BACKEDGE - FOR HANGING BOOK SUPPORT

Details:
- Module 500/750/900/1000 mm
- Depth 250/300/400 mm
- Acrylic backedge H17 mm (loose part)
- Hanging book support
- Steel brackets
- Max. weight 80 kg.
- Straight, 45°/60° sloping & 7,5° reverse tilted

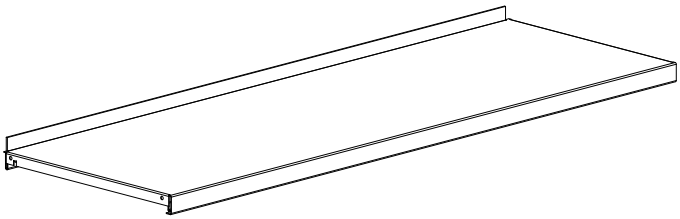

Use with:
- ST2 - steel top shelf
- WT1/WT2/WT3 - wooden top shelf
- WO1 - wooden overlaying top plate

Note:
- The middle shelf must be screwed into panels for bays with cross brace above 920 mm.

SI3 STEEL INTERMEDIATE SHELF WITH STEEL BACKEDGE - FOR HANGING BOOK SUPPORT

Details:
- Module 500/750/900/1000 mm
- Depth 250/300/400 mm
- Steel backedge H25 mm
- Hanging book support
- Pins/screws
- Max. weight 80 kg.
- Straight and sloping

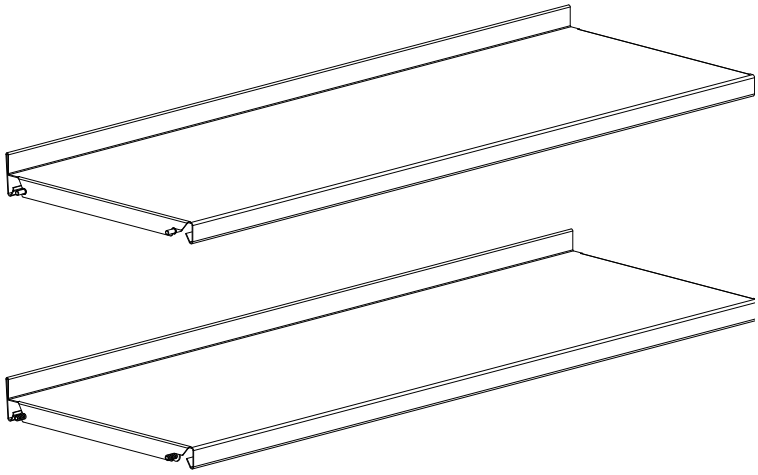

Use with:
- ST4 - steel top shelf
- WT1/WT2/WT3 - wooden top shelf
- WO1 - wooden overlaying top plate

Note:
- The middle shelf must be screwed into panels for bays with cross brace above 920 mm.

SI4 STEEL INTERMEDIATE SHELF WITH NO BACKEDGE - FOR HANGING BOOK SUPPORT

Details:
- Module 500/750/900/1000 mm
- Depth 250/300/400 mm
- No backedge
- Hanging book support
- Pins/screws
  Max. weight 80 kg.
- Straight

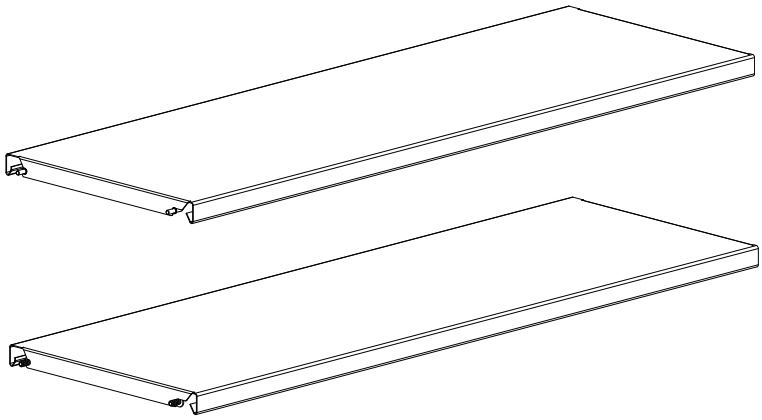

Use with:
- ST4 - steel top shelf
- WT1/WT2/WT3 - wooden top shelf
- WO1 - wooden overlaying top plate

Note:
- The middle shelf must be screwed into panels for bays with cross brace above 920 mm.

SHELVES

SI1 STEEL INTERMEDIATE SHELF

SI1 - steel intermediate shelf with steel backedge and steel brackets - for backedge book support

Steel backedge 47 mm.

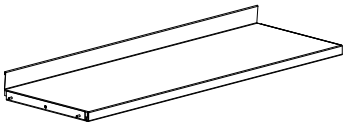

Module mm	Shelf depth mm	Item no.	
500	250	F14420211	-
500	300	F14420311	-
500	400	F14420511	-
750	250	F14420221	-
750	300	F14420321	-
750	400	F14420521	-
900	250	F14420231	-
900	300	F14420331	-
900	400	F14420531	-
1000	250	F14420241	-
1000	300	F14420341	-
1000	400	F14420541	-

SI1 - steel intermediate shelf with steel backedge - for backedge book support

Steel backedge 47 mm.
Brackets to be ordered separately, see below.

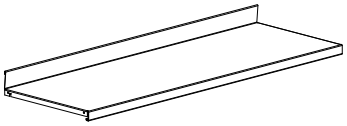

Module mm	Shelf depth mm	Item no.	
500	250	S14335211	-
500	300	S14335311	-
500	400	S14335511	-
750	250	S14335221	-
750	300	S14335321	-
750	400	S14335521	-
900	250	S14335231	-
900	300	S14335331	-
900	400	S14335531	-
1000	250	S14335241	-
1000	300	S14335341	-
1000	400	S14335541	-

Steel bracket - for SI1

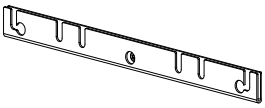

Shelf depth mm	Item no.	
250	S147202	-
300	S147203	-
400	S147205	-

Backedge book support - for SI1

Nickel plated steel, Ø6 mm, with a nylon glider.

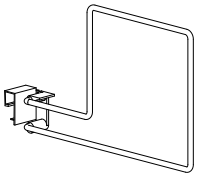

Shelf depth mm	Books left/right of book support	Height	Item no.	
250	Left	16,3	S017754J2	-
300	Left	16,3	S017754J3	-
250	Left (high)	24,3	S017756R2	-
300	Left (high)	24,3	S017756R3	-
250	Right	16,3	S017764J2	-
300	Right	16,3	S017764J3	-

SI1 - steel intermediate shelf with steel frontedge and 45°/60° steel plate brackets

Steel frontedge 47 mm.

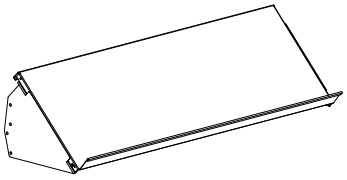

Module mm	Shelf depth mm	Item no. 45/60°	
500	250	F14421211	-
500	300	F14421311	-
500	400	F14421511	-
750	250	F14421221	-
750	300	F14421321	-
750	400	F14421521	-
900	250	F14421231	-
900	300	F14421331	-
900	400	F14421531	-
1000	250	F14421241	-
1000	300	F14421341	-
1000	400	F14421541	-

SI1 - steel intermediate shelf with steel backedge - for backedge book support

Steel backedge 47 mm.
Brackets to be ordered separately, see below.

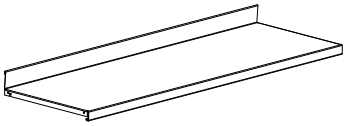

Module mm	Shelf depth mm	Item no.
500	250	S14335211
500	300	S14335311
500	400	S14335511
750	250	S14335221
750	300	S14335321
750	400	S14335521
900	250	S14335231
900	300	S14335331
900	400	S14335531
1000	250	S14335241
1000	300	S14335341
1000	400	S14335541

45°/60° steel plate bracket - for SI1

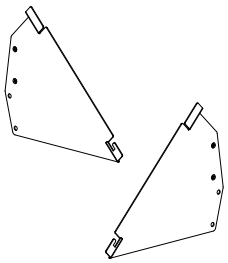

Shelf depth mm	Type	Item no.	
250	Left	S1472121	-
250	Right	S1472122	-
300	Left	S1472131	-
300	Right	S1472132	-
400	Left	S1472151	-
400	Right	S1472152	-

SHELVES

SI1 STEEL INTERMEDIATE SHELF

SI1 - steel intermediate shelf with steel backedge and 7.5° reverse tilted steel plate brackets - for book support

Steel backedge 47 mm.

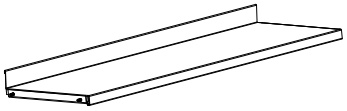

Module mm	Shelf depth mm	Item no.	
500	250	F14423211	-
500	300	F14423311	-
500	400	F14423511	-
750	250	F14423221	-
750	300	F14423321	-
750	400	F14423521	-
900	250	F14423231	-
900	300	F14423331	-
900	400	F14423531	-
1000	250	F14423241	-
1000	300	F14423341	-
1000	400	F14423541	-

SI1 - steel intermediate shelf with steel backedge - for backedge book support

Steel backedge 47 mm.
Brackets to be ordered separately, see below.

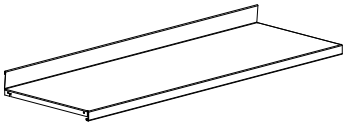

Module mm	Shelf depth mm	Item no.	
500	250	S14335211	-
500	300	S14335311	-
500	400	S14335511	-
750	250	S14335221	-
750	300	S14335321	-
750	400	S14335521	-
900	250	S14335231	-
900	300	S14335331	-
900	400	S14335531	-
1000	250	S14335241	-
1000	300	S14335341	-
1000	400	S14335541	-

7.5° reverse tilted steel plate bracket - for SI1

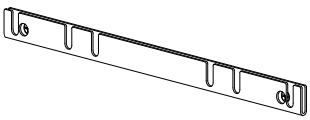

Shelf depth mm	Item no.	
250	S147232	-
300	S147233	-
400	S147235	-

SI2 - steel intermediate shelf with acrylic backedge and steel brackets - for hanging book support

Acrylic backedge 17 mm.
Note: Spot welding visible on top of surface.

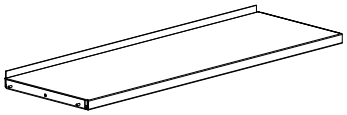

Module mm	Shelf depth mm	Item no.	
500	250	F14424211	-
500	300	F14424311	-
500	400	F14424511	-
750	250	F14424221	-
750	300	F14424321	-
750	400	F14424521	-
900	250	F14424231	-
900	300	F14424331	-
900	400	F14424531	-
1000	250	F14424241	-
1000	300	F14424341	-
1000	400	F14424541	-

SI2 - steel intermediate shelf with acrylic backedge - for hanging book support

Acrylic backedge 17 mm.
Brackets to be ordered separately, see below. Note: Spot welding visible on top of surface.

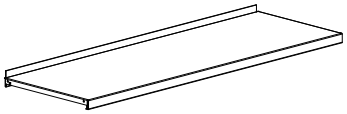

Module mm	Shelf depth mm	Item no.	
500	250	S14336211	-
500	300	S14336311	-
500	400	S14336511	-
750	250	S14336221	-
750	300	S14336321	-
750	400	S14336521	-
900	250	S14336231	-
900	300	S14336331	-
900	400	S14336531	-
1000	250	S14336241	-
1000	300	S14336341	-
1000	400	S14336541	-

Steel bracket - for SI2

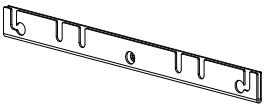

Shelf depth mm	Item no.	
250	S147202	-
300	S147203	-
400	S147205	-

Hanging book support - for SI2

Available in chrome steel or standard steel colours.

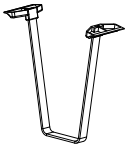

Type	Height mm	Item no.	
Normal	200	S017775K	-
Folio	250	S017776Y	-

SHELVES

SI2 STEEL INTERMEDIATE SHELF

SI2 - steel intermediate shelf with acrylic backedge and 45°/60° steel plate brackets

Acrylic backedge 17 mm.

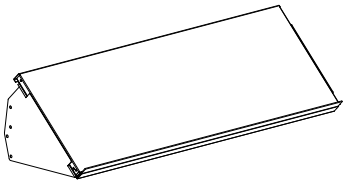

Module mm	Shelf depth mm	Item no. 45/60°	
500	250	F14425211	-
500	300	F14425311	-
500	400	F14425511	-
750	250	F14425221	-
750	300	F14425321	-
750	400	F14425521	-
900	250	F14425231	-
900	300	F14425331	-
900	400	F14425531	-
1000	250	F14425241	-
1000	300	F14425341	-
1000	400	F14425541	-

SI2 - steel intermediate shelf with acrylic backedge - for hanging book support

Acrylic backedge 17 mm. Brackets to be ordered separately, see below. Note: Spot welding visible on top of surface.

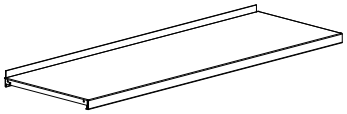

Module mm	Shelf depth mm	Item no.	
500	250	S14336211	-
500	300	S14336311	-
500	400	S14336511	-
750	250	S14336221	-
750	300	S14336321	-
750	400	S14336521	-
900	250	S14336231	-
900	300	S14336331	-
900	400	S14336531	-
1000	250	S14336241	-
1000	300	S14336341	-
1000	400	S14336541	-

45°/60° steel plate bracket - for SI2

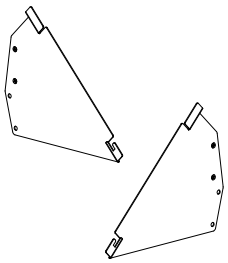

Shelf depth mm	Type	Item no.	
250	Left	S1472121	-
250	Right	S1472122	-
300	Left	S1472131	-
300	Right	S1472132	-
400	Left	S1472151	-
400	Right	S1472152	-

Acrylic backedge - for SI2

Spare part. H40 mm, 17 mm above shelf.

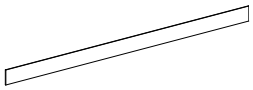

Module	Item no.	
500	S019501	-
750	S019502	-
900	S019503	-
1000	S019504	-

SI2 - steel intermediate shelf with acrylic backedge and 7.5° reverse tilted steel plate brackets

Acrylic backedge 17 mm.

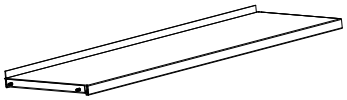

Module mm	Shelf depth mm	Item no.	
500	250	F14427211	-
500	300	F14427311	-
500	400	F14427511	-
750	250	F14427221	-
750	300	F14427321	-
750	400	F14427521	-
900	250	F14427231	-
900	300	F14427331	-
900	400	F14427531	-
1000	250	F14427241	-
1000	300	F14427341	-
1000	400	F14427541	-

SI2 - steel intermediate shelf with acrylic backedge - for hanging book support

Acrylic backedge 17 mm. Brackets to be ordered separately, see below. Note: Spot welding visible on top of surface.

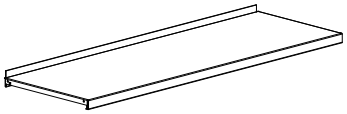

Module mm	Shelf depth mm	Item no.	
500	250	S14336211	-
500	300	S14336311	-
500	400	S14336511	-
750	250	S14336221	-
750	300	S14336321	-
750	400	S14336521	-
900	250	S14336231	-
900	300	S14336331	-
900	400	S14336531	-
1000	250	S14336241	-
1000	300	S14336341	-
1000	400	S14336541	-

7.5° reverse tilted steel plate bracket - for SI2

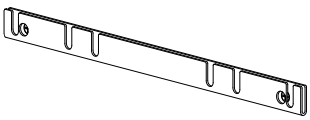

Shelf depth mm	Item no.	
250	S147232	-
300	S147233	-
400	S147235	-

SHELVES

SI3 STEEL INTERMEDIATE SHELF

SI3 - steel intermediate shelf with steel backedge and pins - for hanging book support

Steel backedge H25 mm.

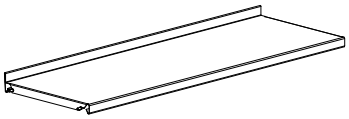

Module mm	Shelf depth mm	Item no.	
500	250	S14337211	-
500	300	S14337311	-
500	400	S14337511	-
750	250	S14337221	-
750	300	S14337321	-
750	400	S14337521	-
900	250	S14337231	-
900	300	S14337331	-
900	400	S14337531	-
1000	250	S14337241	-
1000	300	S14337341	-
1000	400	S14337541	-

SI3 - steel intermediate shelf with steel backedge, screws and spacers - for hanging book support

Steel backedge H25 mm.

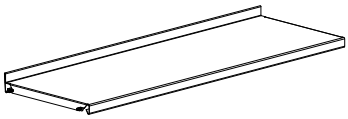

Module mm	Shelf depth mm	Item no.	
500	250	S14338211	-
500	300	S14338311	-
500	400	S14338511	-
750	250	S14338221	-
750	300	S14338321	-
750	400	S14338521	-
900	250	S14338231	-
900	300	S14338331	-
900	400	S14338531	-
1000	250	S14338241	-
1000	300	S14338341	-
1000	400	S14338541	-

Hanging book support - for SI3, SI4 & ST4

Chromed round steel with unbreakable plastic sliders. Easy adjustable.

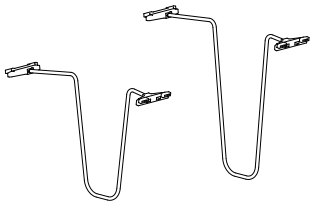

Height mm	Shelf depth mm	Item no.	
220	250	S01779642	-
220	300	S01779643	-
280	250	S017797S2	-
280	300	S017797S3	-

SI3 - steel intermediate shelf with steel backedge, pins and bracket for sloping shelf

Steel backedge H25 mm.

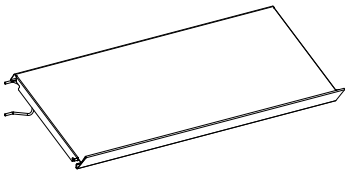

Module mm	Shelf depth mm	Item no.	
500	250	F14428211	-
500	300	F14428311	-
500	400	F14428511	-
750	250	F14428221	-
750	300	F14428321	-
750	400	F14428521	-
900	250	F14428231	-
900	300	F14428331	-
900	400	F14428531	-
1000	250	F14428241	-
1000	300	F14428341	-
1000	400	F14428541	-

SI3 - steel intermediate shelf with steel backedge and pins - for hanging book support

Steel backedge H25 mm.

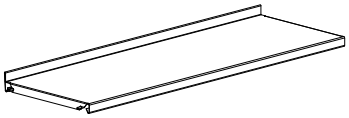

Module mm	Shelf depth mm	Item no.	
500	250	F14428211	-
500	300	F14428311	-
500	400	F14428511	-
750	250	F14428221	-
750	300	F14428321	-
750	400	F14428521	-
900	250	F14428231	-
900	300	F14428331	-
900	400	F14428531	-
1000	250	F14428241	-
1000	300	F14428341	-
1000	400	F14428541	-

Bracket for creating sloping shelf - for SI3

Chrome round steel. The angle is adjustable, but 45° is recommended. Two brackets required per shelf.

Item no.	
S147240	-

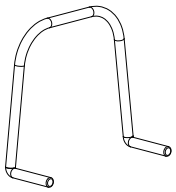

SHELVES

SI4 STEEL INTERMEDIATE SHELF & COMPONENTS

SI4 - steel intermediate shelf with pins - for hanging book support

Pins incl.

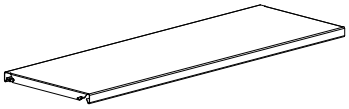

Module mm	Shelf depth mm	Item no.	
500	250	S14339211	-
500	300	S14339311	-
500	400	S14339511	-
750	250	S14339221	-
750	300	S14339321	-
750	400	S14339521	-
900	250	S14339231	-
900	300	S14339331	-
900	400	S14339531	-
1000	250	S14339241	-
1000	300	S14339341	-
1000	400	S14339541	-

SI4 - steel intermediate with screws and spacer - for hanging book support

Screws incl.

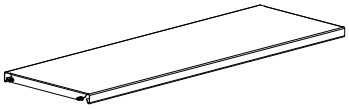

Module mm	Shelf depth mm	Item no.	
500	250	S14340211	-
500	300	S14340311	-
500	400	S14340511	-
750	250	S14340221	-
750	300	S14340321	-
750	400	S14340521	-
900	250	S14340231	-
900	300	S14340331	-
900	400	S14340531	-
1000	250	S14340241	-
1000	300	S14340341	-
1000	400	S14340541	-

Hanging book support - for SI4

Chromed round steel with unbreakable plastic sliders. Easy adjustable.

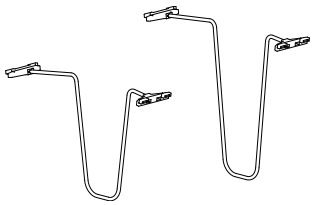

Height mm	Shelf depth mm	Item no.	
220	250	S01779642	-
220	300	S01779643	-
280	250	S017797S2	-
280	300	S017797S3	-

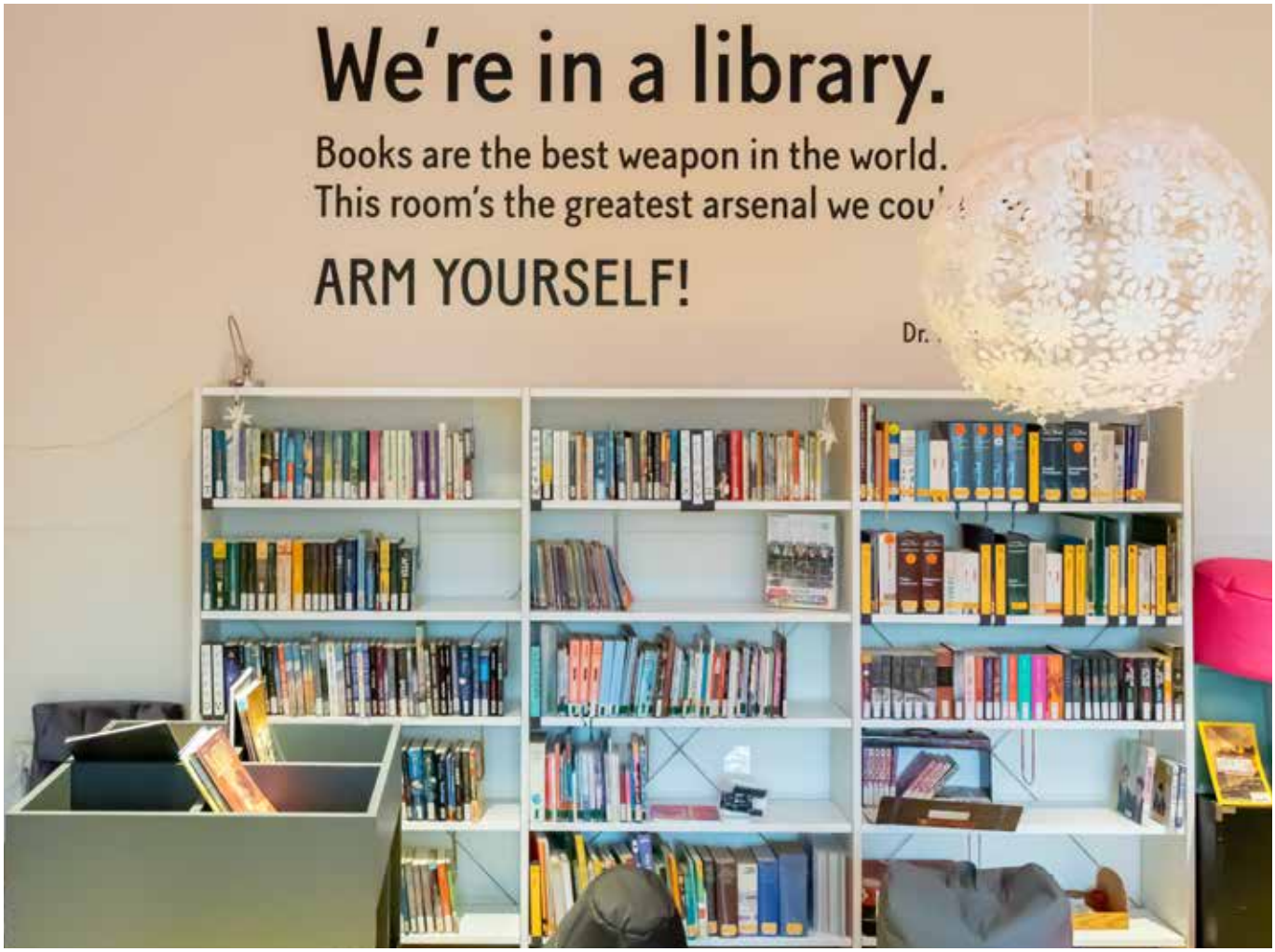
We're in a library.
Books are the best weapon in the world.
This room's the greatest arsenal we cou
ARM YOURSELF!
Dr.

SHELVES

WI1 & WI2 WOODEN INTERMEDIATE SHELVES

WI1 WOODEN INTERMEDIATE SHELF WITH H47 MM STEEL BACKEDGE

Details:
- Module 500/750/900 mm
- Depth 250/300/400 mm
- Painted/veneer
- Steel backedge H47 mm for backedge book support
- Snapfix/snapfix and screws
- Max. weight 80 kg.
- Blockboard
- Straight

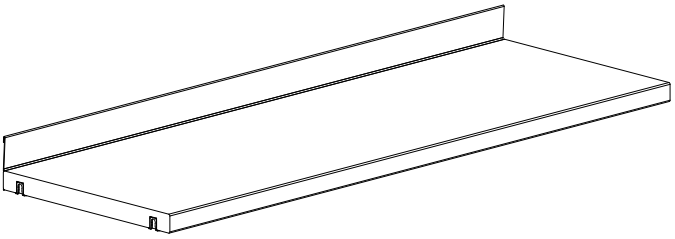

Use with:
- SI1 steel shelf
- ST1 - steel top shelf
- WT1/WT2/WT3 - wooden top shelf
- WO1 - wooden overlaying top plate

Note:
- The middle shelf must be screwed into panels for bays with cross brace above 920 mm.

WI2 WOODEN INTERMEDIATE SHELF

Details:
- Module 500/750/900 mm
- Depth 250/300/400 mm
- Painted/veneer
- No backedge
- Snapfix/snapfix and screws
- Max. weight 80 kg.
- Blockboard
- Straight

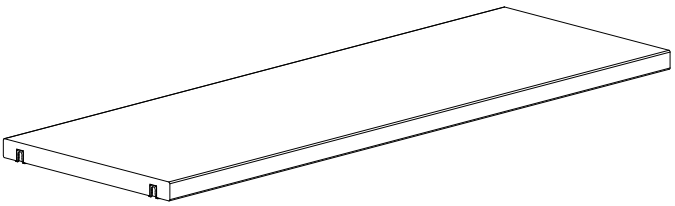

Use with:
- SI2 - steel shelf
- ST2 - steel top shelf
- WT1/WT2/WT3 - wooden top shelf
- WO1 - wooden overlaying top plate

Note:
- The middle shelf must be screwed into panels for bays with cross brace above 920 mm.

WI3 WOODEN INTERMEDIATE SHELF WITH H47 MM STEEL BACKEDGE

Details:
- Module 500/750/900/1000 mm
- Depth 250/300/400 mm
- Melamine/laminate
- Steel backedge H47 mm
- With/without groove for clip-on label holder
- Snapfix/snapfix and screws
- Max. weight 60 kg.
- Melamine: chipboard
  Laminate: blockboard
- Straight

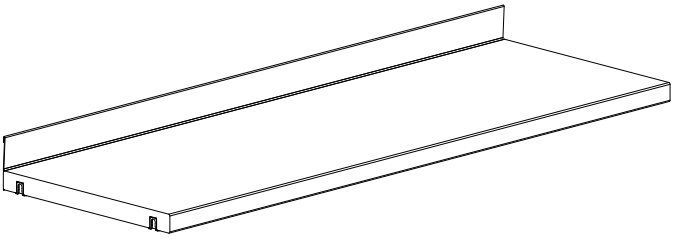

Use with:
- SI3/SI4 - steel shelf
- ST3 - steel top shelf
- WT1/WT2/WT3 - wooden top shelf
- WO1 - wooden overlaying top plate

Note:
- The middle shelf must be screwed into panels for bays with cross brace above 920 mm.

WI4 WOODEN INTERMEDIATE SHELF

Details:
- Module 500/750/900/1000 mm
- Depth 250/300/400 mm
- Melamine/laminate
- No backedge
- With/without groove for clip-on label holder
- Snapfix/snapfix and screws
- Max. weight 60 kg.
- Melamine: chipboard
  Laminate: blockboard
- Straight

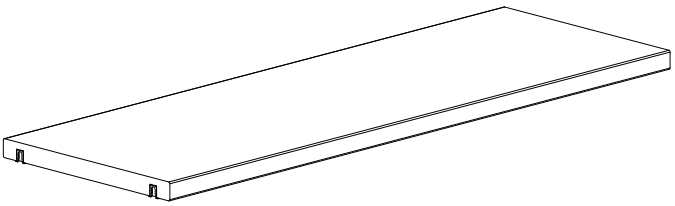

Use with:
- SI3/SI4 - steel shelf
- ST3 - steel top shelf
- WT1/WT2/WT3 - wooden top shelf
- WO1 - wooden overlaying top plate

Note:
- The middle shelf must be screwed into panels for bays with cross brace above 920 mm.

SHELVES

WI1 WOODEN INTERMEDIATE SHELF WITH H47 MM BACKEDGE

Painted and veneered shelves are FSC-certified.

WI1 - wooden intermediate shelf with steel backedge and snapfix - for backedge book support

H47 mm steel backedge.
Incl. fittings (snapfix).

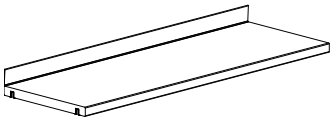

Module mm	Shelf depth mm	Item no.	Painted S14540	Veneer S14541
500	250	S145xx211	-	-
500	300	S145xx311	-	-
500	400	S145xx511	-	-
750	250	S145xx221	-	-
750	300	S145xx321	-	-
750	400	S145xx521	-	-
900	250	S145xx231	-	-
900	300	S145xx331	-	-
900	400	S145xx531	-	-

WI1 - wooden intermediate shelf with steel backedge, snapfix and screws - for backedge book support

H47 mm steel backedge.
Incl. fittings (snapfix and screws).

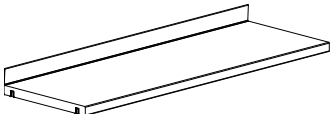

Module mm	Shelf depth mm	Item no.	Painted S14542	Veneer S14543
500	250	S145xx211	-	-
500	300	S145xx311	-	-
500	400	S145xx511	-	-
750	250	S145xx221	-	-
750	300	S145xx321	-	-
750	400	S145xx521	-	-
900	250	S145xx231	-	-
900	300	S145xx331	-	-
900	400	S145xx531	-	-

Backedge book support - for WI1

Nickel plated steel, Ø6 mm,
with a nylon glider.

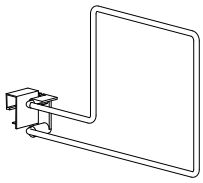

Shelf depth mm	Books left/right of book support	Height	Item no.
250	Left	16,3	S017754J2
300	Left	16,3	S017754J3
250	Left (high)	24,3	S017756R2
300	Left (high)	24,3	S017756R3
250	Right	16,3	S017764J2
300	Right	16,3	S017764J3

Painted and veneered shelves are FSC-certified.

WI2 - wooden intermediate shelf with snapfix

Incl. fittings (snapfix).

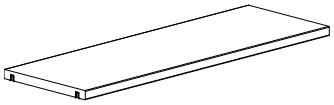

Module mm	Shelf depth mm	Item no.	Painted S14544	Veneer S14545
500	250	S145xx211	-	-
500	300	S145xx311	-	-
500	400	S145xx511	-	-
750	250	S145xx221	-	-
750	300	S145xx321	-	-
750	400	S145xx521	-	-
900	250	S145xx231	-	-
900	300	S145xx331	-	-
900	400	S145xx531	-	-

WI2 - wooden intermediate shelf with snapfix and screws

Incl. fittings (snapfix and screws).

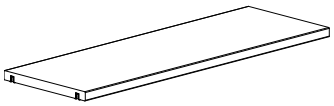

Module mm	Shelf depth mm	Item no.	Painted S14546	Veneer S14547
500	250	S145xx211	-	-
500	300	S145xx311	-	-
500	400	S145xx511	-	-
750	250	S145xx221	-	-
750	300	S145xx321	-	-
750	400	S145xx521	-	-
900	250	S145xx231	-	-
900	300	S145xx331	-	-
900	400	S145xx531	-	-

Hanging book support - for WI2 with rail

Available in chrome steel or standard steel colours.

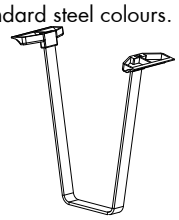

Type	Height mm	Item no.	
Normal	200	S017775K	-
Folio	250	S017776Y	-

Rail for fixing hanging book support under WI2

Fix underneath wooden shelf.
For book support S01777.
Incl. fittings

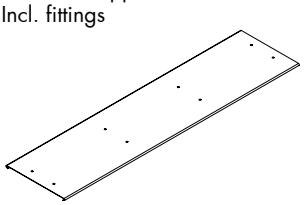

Module	Item no.	Price
750	S017782	-
900	S017783	-

SHELVES

WI3 WOODEN INTERMEDIATE SHELF WITH H47 MM BACKEDGE

WI3 - wooden intermediate shelf with steel backedge and snapfix

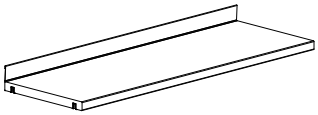

H47 mm steel backedge. Incl. fittings (snapfix)	Module mm	Shelf depth mm	Item no.	Melamine S14548
	500	250	S14548211	-
	500	300	S14548311	-
	500	400	S14548511	-
	750	250	S14548221	-
	750	300	S14548321	-
	750	400	S14548521	-
	900	250	S14548231	-
	900	300	S14548331	-
	900	400	S14548531	-

WI3 - wooden intermediate shelf with steel backedge and snapfix

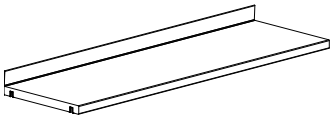

H47 mm steel backedge. Incl. fittings (snapfix)	Module mm	Shelf depth mm	Item no.	Laminate S14549
	1000	250	S14549241	-
	1000	300	S14549341	-
	1000	400	S14549541	-

WI3 - wooden intermediate shelf with steel backedge, snapfix and groove for clip-on label holder

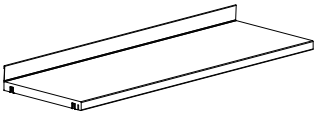

H47 mm steel backedge. Incl. fittings (snapfix)	Module mm	Shelf depth mm	Item no.	Melamine S14552
	500	250	S14552211	-
	500	300	S14552311	-
	500	400	S14552511	-
	750	250	S14552221	-
	750	300	S14552321	-
	750	400	S14552521	-
	900	250	S14552231	-
	900	300	S14552331	-
	900	400	S14552531	-

WI3 - wooden intermediate shelf with steel backedge, snapfix and groove for clip-on label holder

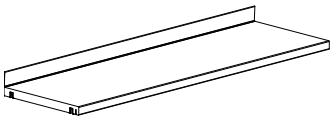

H47 mm steel backedge. Incl. fittings (snapfix)	Module mm	Shelf depth mm	Item no.	Laminate S14553
	1000	250	S14553241	-
	1000	300	S14553341	-
	1000	400	S14553541	-

WI4 - wooden intermediate shelf, with snapfix

Incl. fittings (snapfix)

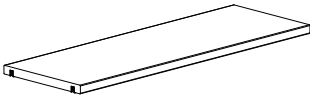

Module mm	Shelf depth mm	Item no.	Melamine S14556
500	250	S14556211	-
500	300	S14556311	-
500	400	S14556511	-
750	250	S14556221	-
750	300	S14556321	-
750	400	S14556521	-
900	250	S14556231	-
900	300	S14556331	-
900	400	S14556531	-

WI4 - wooden intermediate shelf, with snapfix

Incl. fittings (snapfix)

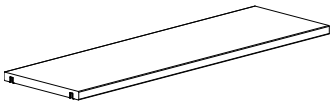

Module mm	Shelf depth mm	Item no.	Laminate S14557
1000	250	S14557241	-
1000	300	S14557341	-
1000	400	S14557541	-

WI4 - wooden intermediate shelf, with snapfix, with groove for clip-on label holder

Incl. fittings (snapfix)

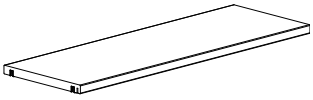

Module mm	Shelf depth mm	Item no.	Melamine S14560
500	250	S14560211	-
500	300	S14560311	-
500	400	S14560511	-
750	250	S14560221	-
750	300	S14560321	-
750	400	S14560521	-
900	250	S14560231	-
900	300	S14560331	-
900	400	S14560531	-

WI4 - wooden intermediate shelf, with snapfix, with groove for clip-on label holder

Incl. fittings (snapfix)

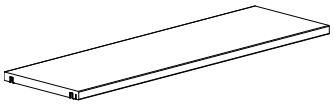

Module mm	Shelf depth mm	Item no.	Laminate S14561
1000	250	S14561241	-
1000	300	S14561341	-
1000	400	S14561541	-

SHELVES

SB1 & SB2 STEEL BOTTOM SHELVES

SB1 STEEL BOTTOM SHELF WITH STEEL BACKEDGE - FOR BACKEDGE BOOK SUPPORT

Details:
- Module 500/750/900/1000 mm
- Depth 250/300/400 mm
- Steel backedge H47 mm
- Backedge book support
- Steel brackets
- Max. weight 80 kg.

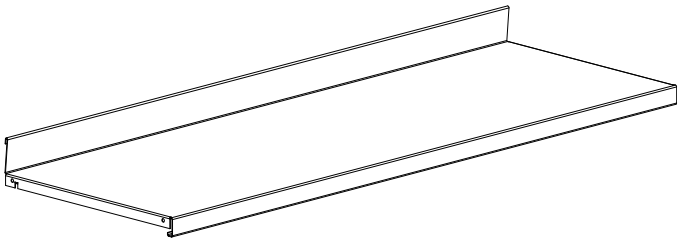

Use with:
- ST1 - steel top shelf
- WT1/WT2/WT3 - wooden top shelf
- WO1 - wooden overlaying top plate

SB2 STEEL BOTTOM SHELF WITH ACRYLIC BACKEDGE

Details:
- Module 500/750/900/1000 mm
- Depth 250/300/400 mm
- Acrylic backedge H17 mm (loose part)
- Hanging book support
- Steel brackets
- Max. weight 80 kg.

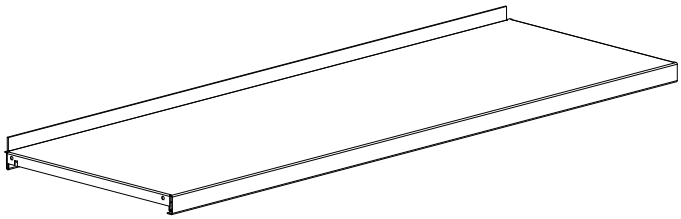

Use with:
- ST2 - steel top shelf
- WT1/WT2/WT3 - wooden top shelf
- WO1 - wooden overlaying top plate

SB3 STEEL BOTTOM SHELF WITH STEEL BACKEDGE

Details:
- Module 500/750/900/1000 mm
- Depth 250/300/400 mm
- Steel backedge H25 mm
- Hanging book support
- Screws
- Max. weight 80 kg.

Use with:
- ST3 - steel top shelf
- WT1/WT2/WT3 - wooden top shelf
- WO1 - wooden overlaying top plate

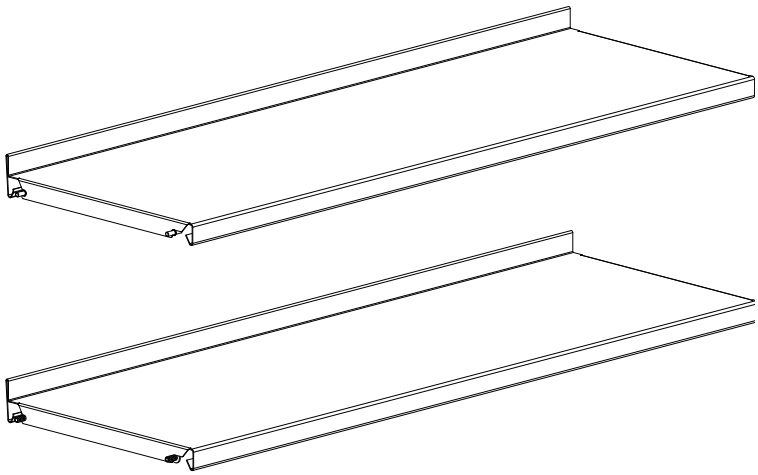

SB4 STEEL BOTTOM SHELF

Details:
- Module 500/750/900/1000 mm
- Depth 250/300/400 mm
- No backedge
- Hanging book support
- Screws
- Max. weight 80 kg.

Use with:
- ST3 - steel top shelf
- WT1/WT2/WT3 - wooden top shelf
- WO1 - wooden overlaying top plate

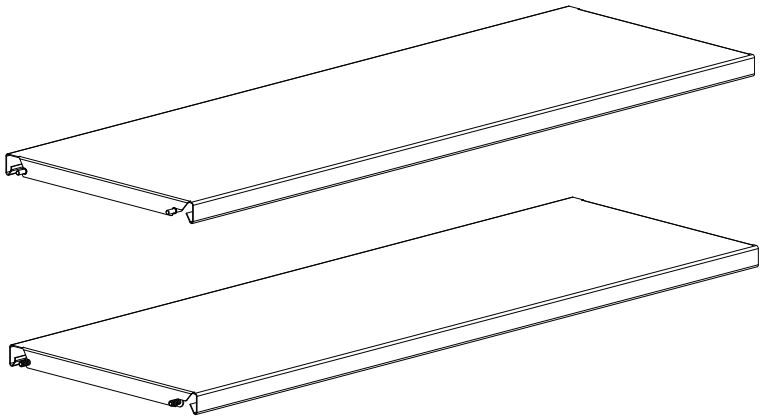

SHELVES

SB1 STEEL BOTTOM SHELF

SB1 - steel bottom shelf with steel backedge and steel brackets - for backedge book support

Steel backedge 47 mm.

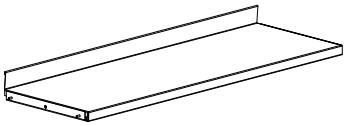

Module mm	Shelf depth mm	Item no.	
500	250	F14450211	-
500	300	F14450311	-
500	400	F14450511	-
750	250	F14450221	-
750	300	F14450321	-
750	400	F14450521	-
900	250	F14450231	-
900	300	F14450331	-
900	400	F14450531	-
1000	250	F14450241	-
1000	300	F14450341	-
1000	400	F14450541	-

SB1 - steel bottom shelf with steel backedge - for backedge book support

Steel backedge 47 mm.
Brackets to be ordered separately, see below.

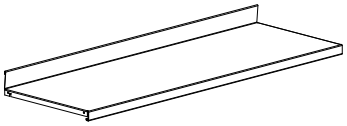

Module mm	Shelf depth mm	Item no.	
500	250	S14365211	-
500	300	S14365311	-
500	400	S14365511	-
750	250	S14365221	-
750	300	S14365321	-
750	400	S14365521	-
900	250	S14365231	-
900	300	S14365331	-
900	400	S14365531	-
1000	250	S14365241	-
1000	300	S14365341	-
1000	400	S14365541	-

Steel bracket - for SB1

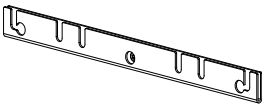

Shelf depth mm	Item no.	
250	S147202	-
300	S147203	-
400	S147205	-

Backedge book support - for SB1

Nickel plated steel, Ø6 mm, with a nylon glider.

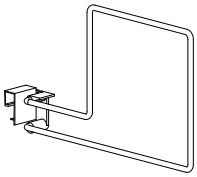

Shelf depth mm	Books left/right of book support	Height	Item no.	
250	Left	16,3	S017754J2	-
300	Left	16,3	S017754J3	-
250	Left (high)	24,3	S017756R2	-
300	Left (high)	24,3	S017756R3	-
250	Right	16,3	S017764J2	-
300	Right	16,3	S017764J3	-

SB1 - steel bottom shelf with steel backedge and 7.5° reverse tilted steel plate brackets - for backedge book support

Steel backedge 47 mm.

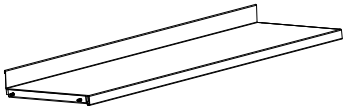

Module mm	Shelf depth mm	Item no.	
500	250	F14452211	-
500	300	F14452311	-
500	400	F14452511	-
750	250	F14452221	-
750	300	F14452321	-
750	400	F14452521	-
900	250	F14452231	-
900	300	F14452331	-
900	400	F14452531	-
1000	250	F14452241	-
1000	300	F14452341	-
1000	400	F14452541	-

SB1 - steel bottom shelf with steel backedge - for backedge book support

Steel backedge 47 mm.
Brackets to be ordered separately, see below.

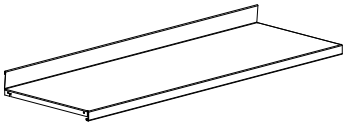

Module mm	Shelf depth mm	Item no.	
500	250	S14365211	-
500	300	S14365311	-
500	400	S14365511	-
750	250	S14365221	-
750	300	S14365321	-
750	400	S14365521	-
900	250	S14365231	-
900	300	S14365331	-
900	400	S14365531	-
1000	250	S14365241	-
1000	300	S14365341	-
1000	400	S14365541	-

7.5° reverse tilted steel plate bracket - for SB1

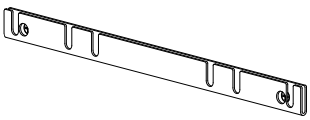

Shelf depth mm	Item no.	
250	S147232	-
300	S147233	-
400	S147235	-

SHELVES

SB2 STEEL BOTTOM SHELF

SB2 - steel bottom shelf with acrylic backedge and steel brackets

Acrylic backedge 17 mm. With brackets. Note: Spot welding visible on top of surface.

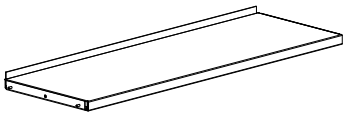

Module mm	Shelf depth mm	Item no.	
500	250	F14451211	-
500	300	F14451311	-
500	400	F14451511	-
750	250	F14451221	-
750	300	F14451321	-
750	400	F14451521	-
900	250	F14451231	-
900	300	F14451331	-
900	400	F14451531	-
1000	250	F14451241	-
1000	300	F14451341	-
1000	400	F14451541	-

SB2 - steel bottom shelf with acrylic backedge

Acrylic backedge 17 mm. Note: Spot welding visible on top of surface.

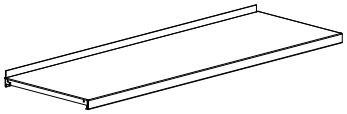

Module mm	Shelf depth mm	Item no.	
500	250	S14366211	-
500	300	S14366311	-
500	400	S14366511	-
750	250	S14366221	-
750	300	S14366321	-
750	400	S14366521	-
900	250	S14366231	-
900	300	S14366331	-
900	400	S14366531	-
1000	250	S14366241	-
1000	300	S14366341	-
1000	400	S14366541	-

Steel bracket - for SB2

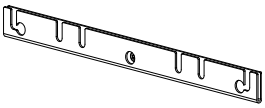

Shelf depth mm	Item no.	
250	S147202	-
300	S147203	-
400	S147205	-

SB2 - steel bottom shelf with acrylic backedge and 7.5° reverse tilted steel plate brackets

Acrylic backedge 17 mm.
Note: Spot welding visible on top of surface.

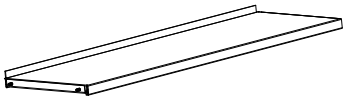

Module mm	Shelf depth mm	Item no.	
500	250	F14453211	-
500	300	F14453311	-
500	400	F14453511	-
750	250	F14453221	-
750	300	F14453321	-
750	400	F14453521	-
900	250	F14453231	-
900	300	F14453331	-
900	400	F14453531	-
1000	250	F14453241	-
1000	300	F14453341	-
1000	400	F14453541	-

SB2 - steel bottom shelf with acrylic backedge - for hanging book support

Acrylic backedge 17 mm.
Brackets to be ordered separately, see below. Note: Spot welding visible on top of surface.

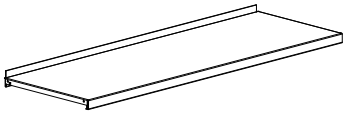

Module mm	Shelf depth mm	Item no.	
500	250	S14366211	-
500	300	S14366311	-
500	400	S14366511	-
750	250	S14366221	-
750	300	S14366321	-
750	400	S14366521	-
900	250	S14366231	-
900	300	S14366331	-
900	400	S14366531	-
1000	250	S14366241	-
1000	300	S14366341	-
1000	400	S14366541	-

7.5° reverse tilted steel plate bracket - for SB2

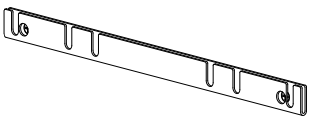

Shelf depth mm	Item no.	
250	S147232	-
300	S147233	-
400	S147235	-

SHELVES

SB3/SB4 STEEL BOTTOM SHELF

SB3 - steel bottom shelf with steel backedge, screws and spacers

Steel backedge H25 mm.

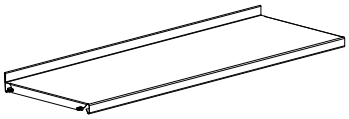

Module mm	Shelf depth mm	Item no.	
500	250	S14367211	-
500	300	S14367311	-
500	400	S14367511	-
750	250	S14367221	-
750	300	S14367321	-
750	400	S14367521	-
900	250	S14367231	-
900	300	S14367331	-
900	400	S14367531	-
1000	250	S14367241	-
1000	300	S14367341	-
1000	400	S14367541	-

SB4 - steel bottom with screws and spacer - for hanging book support

Screws incl.

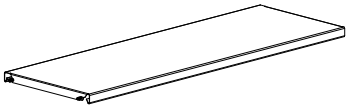

Module mm	Shelf depth mm	Item no.	
500	250	S14368211	-
500	300	S14368311	-
500	400	S14368511	-
750	250	S14368221	-
750	300	S14368321	-
750	400	S14368521	-
900	250	S14368231	-
900	300	S14368331	-
900	400	S14368531	-
1000	250	S14368241	-
1000	300	S14368341	-
1000	400	S14368541	-

Pédagogie
Grandes dessinées

SHELVES

WB1 & WB2 WOODEN BOTTOM SHELVES

WB1 WOODEN BOTTOM SHELF WITH H47 MM STEEL BACKEDGE

Details:
- Module 500/750/900 mm
- Depth 250/300/400 mm
- Painted/veneer
- Steel backedge H47 mm for backedge book support
- Snapfix and screws
- Max. weight 80 kg.
- Blockboard

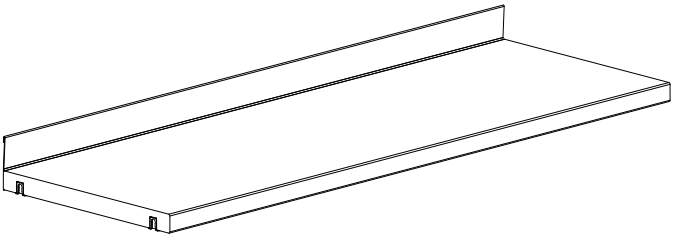

Use with:
- SI1 steel shelf
- ST1 - steel top shelf
- WT1/WT2/WT3 - wooden top shelf
- WO1 - wooden overlaying top plate

WB2 WOODEN BOTTOM SHELF

Details:
- Module 500/750/900 mm
- Depth 250/300/400 mm
- Painted/veneer
- Snapfix and screws
- Max. weight 80 kg.
- Blockboard

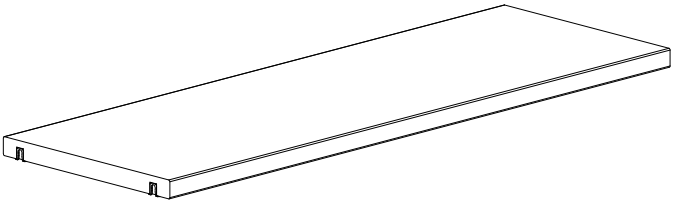

Use with:
- SI2 - steel shelf
- ST2 - steel top shelf
- WT1/WT2/WT3 - wooden top shelf
- WO1 - wooden overlaying top plate

WB3 - WOODEN BOTTOM SHELF WITH H47 MM STEEL BACKEDGE

Details:
- Module 500/750/900/1000 mm
- Depth 250/300/400 mm
- Melamine/laminate
- Steel backedge H47 mm
- Snapfix and screws
- Max. weight 60 kg.
- Chipboard/blockboard

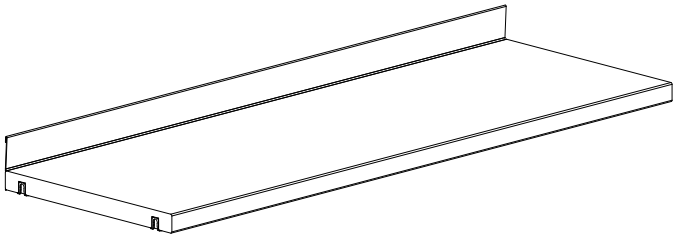

Use with:
- SI3/SI4 - steel shelf
- ST3 - steel top shelf
- WT1/WT2/WT3 - wooden top shelf
- WO1 - wooden overlaying top plate

WB4 WOODEN BOTTOM SHELF

Details:
- Module 500/750/900/1000 mm
- Depth 250/300/400 mm
- Melamine/laminate
- Snapfix and screws
- Max. weight 60 kg.
- Chipboard/blockboard

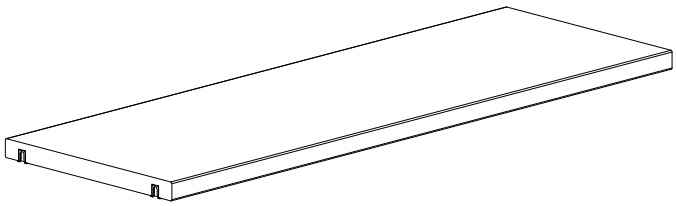

Use with:
- SI3/SI4 - steel shelf
- ST3 - steel top shelf
- WT1/WT2/WT3 - wooden top shelf
- WO1 - wooden overlaying top plate

SHELVES

WB1 & WB2 - WOODEN BOTTOM SHELVES

WB1 - wooden bottom shelf with steel backedge, snapfix and screws - for backedge book support

H47 mm steel backedge.
Blockboard. Incl. fittings
(snapfix and screws).

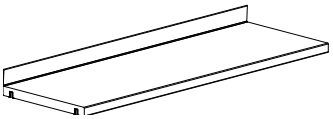

Module mm	Shelf depth mm	Item no.	Painted S14650	Veneer S14651
500	250	S146xx211	-	-
500	300	S146xx311	-	-
500	400	S146xx511	-	-
750	250	S146xx221	-	-
750	300	S146xx321	-	-
750	400	S146xx521	-	-
900	250	S146xx231	-	-
900	300	S146xx331	-	-
900	400	S146xx531	-	-

Backedge book support - for WB1

Nickel plated steel, Ø6 mm,
with a nylon glider.

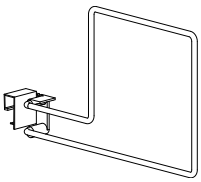

Shelf depth mm	Books left/right of book support	Height	Item no.	
250	Left	16,3	S017754J2	-
300	Left	16,3	S017754J3	-
250	Left (high)	24,3	S017756R2	-
300	Left (high)	24,3	S017756R3	-
250	Right	16,3	S017764J2	-
300	Right	16,3	S017764J3	-

WB2 - wooden bottom shelf, snapfix and screws

Blockboard. Incl. fittings
(snapfix and screws).

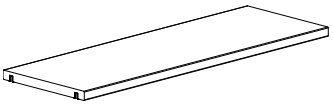

Module mm	Shelf depth mm	Item no.	Painted S14652	Veneer S14653
500	250	S146xx211	-	-
500	300	S146xx311	-	-
500	400	S146xx511	-	-
750	250	S146xx221	-	-
750	300	S146xx321	-	-
750	400	S146xx521	-	-
900	250	S146xx231	-	-
900	300	S146xx331	-	-
900	400	S146xx531	-	-

WB3 - wooden bottom shelf with steel backedge, snapfix and screws

H47 mm steel backedge.
Chipboard. Incl. fittings
(snapfix and screws).

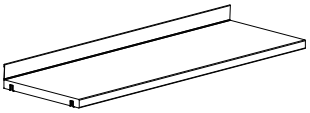

Module mm	Shelf depth mm	Item no.	Melamine S14656
500	250	S14656211	-
500	300	S14656311	-
500	400	S14656511	-
750	250	S14656221	-
750	300	S14656321	-
750	400	S14656521	-
900	250	S14656231	-
900	300	S14656331	-
900	400	S14656531	-

WB3 - wooden bottom shelf with steel backedge, snapfix and screws

H47 mm steel backedge.
Blockboard. Incl. fittings
(snapfix and screws).

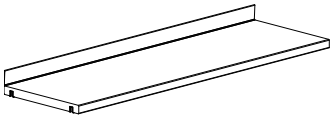

Module mm	Shelf depth mm	Item no.	Laminate S14657
1000	250	S14657241	-
1000	300	S14657341	-
1000	400	S14657541	-

WB4 - wooden bottom shelf, with snapfix and screws

Chipboard. Incl. fittings
(snapfix and screws).

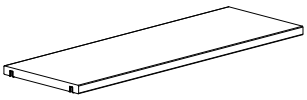

Module mm	Shelf depth mm	Item no.	Melamine S14658
500	250	S14658211	-
500	300	S14658311	-
500	400	S14658511	-
750	250	S14658221	-
750	300	S14658321	-
750	400	S14658521	-
900	250	S14658231	-
900	300	S14658331	-
900	400	S14658531	-

WB4 - wooden bottom shelf, with snapfix and screws

Blockboard. Incl. fittings
(snapfix and screws).

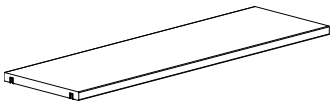

Module mm	Shelf depth mm	Item no.	Laminate S14659
1000	250	S14659241	-
1000	300	S14659341	-
1000	400	S14659541	-

SHELVES

DISPLAY & STORAGE

Steel shelf for pocketbooks, CD's and DVD's

Incl. fittings.
H200 x D225 mm

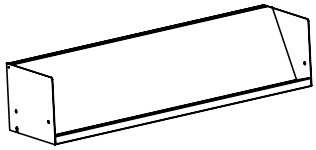

Module mm	Item no.	
900	S147005K693	-

Steel shelf for CD's

Incl. fittings.
H175 x D145 mm

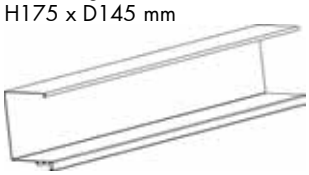

Module mm	Item no.	
750	S147064V412	-
900	S147064V413	-

Steel shelf for DVD's

Incl. fittings.
H273 x D150 mm.

Module mm	Item no.	
750	S147077L462	-
900	S147077L463	-

Steel shelf - 4 compartments (W22.4 cm) with 3 steel dividers and brackets

Incl. fittings. W900 x H200 x Dxx mm.
Capacity: 75 picture
books

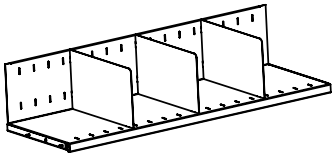

Depth mm	Item no.	
250	F144295K23	-
300	F144295K33	-

Sloping bottom shelf

Incl. fittings

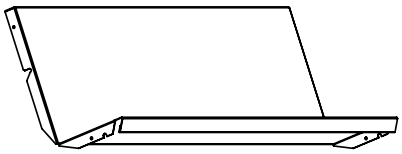

Module mm	Depth of shelving - mm	Item no.	
500	250	S1470821	-
500	300	S1470831	-
750	250	S1470822	-
750	300	S1470832	-
900	250	S1470823	-
900	300	S1470833	-
1000	250	S1470824	-
1000	300	S1470834	-

BCI

FUNCTIONS

STEEL BROWSERS

Single browser - without/with pull-out

Module 750 mm. Incl. fittings and rubber mat. Excl. tubes

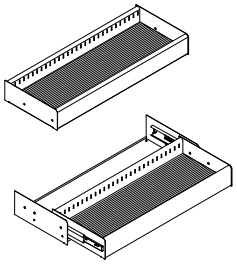

Panel depth mm	Browser height mm	Browser depth mm	No. of dividers	Item no. Fixed		Item no. Pull-out	
300	100	300 *1	0	S148142300	-	S148182300	-
300	100	300	1	S148142301	-	S148182301	-
300	100	300	2	S148142302	-	S148182302	-
300	100	300	4	S148142304	-	S148182304	-

Single browser - without/with pull-out

Module 750 mm. Incl. fittings, rubber mat and tubes.

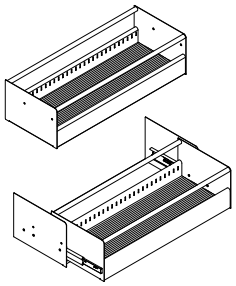

Panel depth mm	Browser height mm	Browser depth mm	No. of dividers	Item no. Fixed		Item no. Pull-out	
300	200	300 *2	0	S148152300	-	S148192300	-
300	200	300	1	S148152301	-	S148192301	-
300	200	300	2	S148152302	-	S148192302	-
300	200	300	4	S148152304	-	S148192304	-

Single browser - without/with pull-out

Module 750 mm. Incl. fittings, rubber mat and tubes.

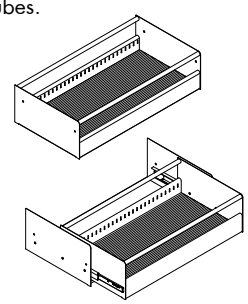

Panel depth mm	Browser height mm	Browser depth mm	No. of dividers	Item no. Fixed		Item no. Pull-out	
300	200	400 *3	0	S148162300	-		
300	200	400	1	S148162301	-		
300	200	400	2	S148162302	-		
300	200	400	4	S148162304	-		
400	200	400	0	S148162500	-	S148202500	-
400	200	400	1	S148162501	-	S148202501	-
400	200	400	2	S148162502	-	S148202502	-
400	200	400	4	S148162504	-	S148202504	-

Double browser - without/with pull-out

Module 750 mm. Incl. fittings and rubber mat. Excl. tubes

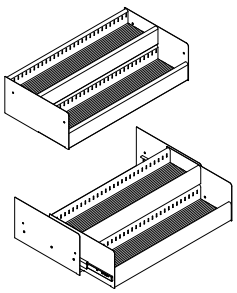

Panel depth mm	Browser height mm	Browser depth mm	No. of dividers	Item no. Fixed		Item no. Pull-out	
300	200	400 *4	0	S148172300	-		
300	200	400	2	S148172302	-		
300	200	400	4	S148172304	-		
300	200	400	8	S148172308	-		
400	200	400	0	S148172500	-	S148212500	-
400	200	400	2	S148172502	-	S148212502	-
400	200	400	4	S148172504	-	S148212504	-
400	200	400	8	S148172508	-	S148212508	-

Single browser - without/with pull-out

Module 900 mm. Incl. fittings and rubber mat. Excl. tubes

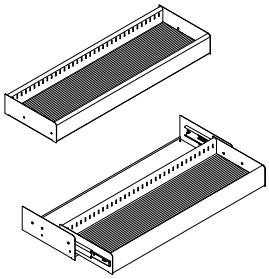

Panel depth mm	Browser height mm	Browser depth mm	No. of dividers	Item no. Fixed		Item no. Pull-out	
300	100	300 *1	0	S148143300	-	S148183300	-
300	100	300	2	S148143302	-	S148183302	-
300	100	300	4	S148143304	-	S148183304	-
300	100	300	5	S148143305	-	S148183305	-

Single browser - without/with pull-out

Module 900 mm. Incl. fittings, rubber mat and tubes.

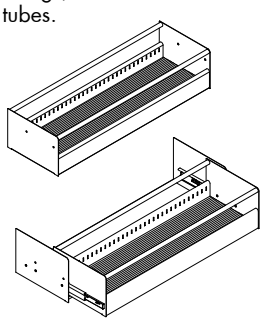

Panel depth mm	Browser height mm	Browser depth mm	No. of dividers	Item no. Fixed		Item no. Pull-out	
300	200	300 *2	0	S148153300	-	S148193300	-
300	200	300	2	S148153302	-	S148193302	-
300	200	300	4	S148153304	-	S148193304	-
300	200	300	5	S148153305	-	S148193305	-

Single browser - without/with pull-out

Module 900 mm. Incl. fittings, rubber mat and tubes.

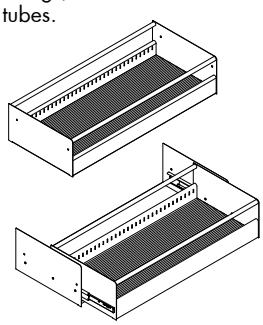

Panel depth mm	Browser height mm	Browser depth mm	No. of dividers	Item no. Fixed		Item no. Pull-out	
300	200	400 *3	0	S148163300	-		
300	200	400	2	S148163302	-		
300	200	400	4	S148163304	-		
300	200	400	5	S148163305	-		
400	200	400	0	S148163500	-	S148203500	-
400	200	400	2	S148163502	-	S148203502	-
400	200	400	4	S148163504	-	S148203504	-
400	200	400	5	S148163505	-	S148203505	-

Double browser - without/with pull-out

Module 900 mm. Incl. fittings and rubber mat. Excl. tubes

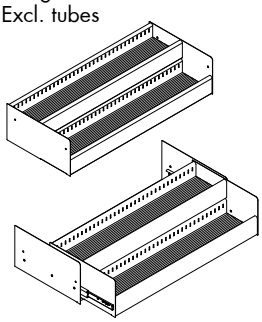

Panel depth mm	Browser height mm	Browser depth mm	No. of dividers	Item no. Fixed		Item no. Pull-out	
300	200	400 *4	0	S148173300	-		
300	200	400	4	S148173304	-		
300	200	400	8	S148173308	-		
300	200	400	10	S148173310	-		
400	200	400	0	S148173500	-	S148213500	-
400	200	400	4	S148173504	-	S148213504	-
400	200	400	8	S148173508	-	S148213508	-
400	200	400	10	S148173510	-	S148213510	-

FUNCTIONS

STEEL BROWSERS

Single AV steel browser - for shelf

H100 mm. Lacquered steel browser and dividers with black flocked steel rods. Rubber mat and 2-5 moveable dividers incl. To be fastened onto existing 250 or 300 mm deep steel or wooden shelf without backedge.

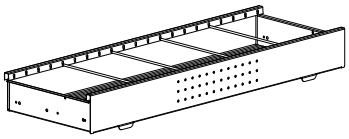

Module	Shelf depth mm	No. of dividers	Item no.	
500	250	2	S148102102	-
500	300	2	S148103102	-
500	400	2	S148105102	-
750	250	3	S148102203	-
750	300	3	S148103203	-
750	400	3	S148105203	-
900	250	4	S148102304	-
900	300	4	S148103304	-
900	400	4	S148105304	-
1000	250	5	S148102405	-
1000	300	5	S148103405	-
1000	400	5	S148105405	-

Single AV steel browser - fixed

H100 mm. Lacquered steel browser and dividers with black flocked steel rods. Rubber mat and 2-5 moveable dividers incl.

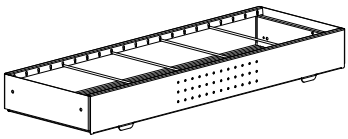

Module	Shelf depth mm	No. of dividers	Item no.	
500	250	2	S148112102	-
500	300	2	S148113102	-
500	400	2	S148115102	-
750	250	3	S148112203	-
750	300	3	S148113203	-
750	400	3	S148115203	-
900	250	4	S148112304	-
900	300	4	S148113304	-
900	400	4	S148115304	-
1000	250	5	S148112405	-
1000	300	5	S148113405	-
1000	400	5	S148115405	-

STEEL BROWSERS

For safety reasons only load the the browsers with pull-out function with a maximum of 15 kg. Only install a maximum of 3 pull-out browsers on single-sided shelving and 1 pull-out browsers on each side of a double-sided shelving. Shelving with castors should not have pull-out browsers installed. The lowest browser must be at least 50 cm above the floor to prevent being used as a step.

Single AV steel browser - with pull-out

H100 mm. Lacquered steel browser and dividers with black flocked steel rods. Rubber mat and 2-5 moveable dividers incl. With handle for pull-out function on telescopic rails.

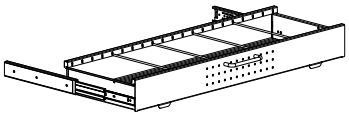

Module	Shelf depth mm	No. of dividers	Item no.
500	250	2	S148122102
500	300	2	S148123102
500	400	2	S148125102
750	250	3	S148122203
750	300	3	S148123203
750	400	3	S148125203
900	250	4	S148122304
900	300	4	S148123304
900	400	4	S148125304
1000	250	5	S148122405
1000	300	5	S148123405
1000	400	5	S148125405

Single AV steel browser - pull-out and soft closing

H100 mm. Lacquered steel browser and dividers with black flocked steel rods. Rubber mat and 2-5 moveable dividers incl. With handle for pull-out function on telescopic rails.

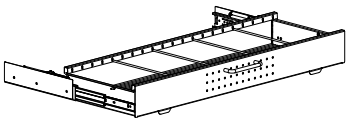

Module	Shelf depth mm	No. of dividers	Item no.	
500	250	2	S148132102	-
500	300	2	S148133102	-
500	400	2	S148135102	-
750	250	3	S148132203	-
750	300	3	S148133203	-
750	400	3	S148135203	-
900	250	4	S148132304	-
900	300	4	S148133304	-
900	400	4	S148135304	-
1000	250	5	S148132405	-
1000	300	5	S148133405	-
1000	400	5	S148135405	-

FUNCTIONS

STEEL BROWSERS

Divider for single-/double browser

Additional steel divider.
Chromed steel.

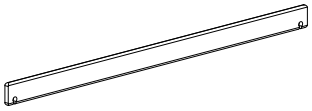

Type	Height mm	Shelf depth mm	Item no.	
Single	100	300	S018118C	-
Single	200	300	S018118C	-
Single	200	400	S01811B4	-
Double	200	400	S01812B4	-

Divider for AV steel browser

Additional lacquered steel divider with flocked steel rod.

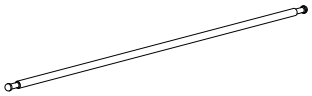

Shelf depth mm	Item no.	
250	S018102	-
300	S018103	-
400	S018105	-

Capacity examples for 750 mm fixed single/double browser (see page 168)

	Type	Module	H x D mm	CD cases	DVD cases	CD pockets	Picture books	Comic picture books
				5 rows	5 rows	5 rows	3 rows	2 rows
*1	Single	750	100 x 300	100	75	325	-	-
*2	Single	750	200 x 300	100	75	325	90	40
*3	Single	750	200 x 400	150	105	325	120	50
				2 x 5 rows	2 x 5 rows	2 x 5 rows	3 rows	2 rows
*4	Double	750	200 x 400	130	95	400	-	-

Capacity examples for 750 mm single/double browser with pull-out (see page 168)

	Type	Module	H x D mm	CD cases	DVD cases	CD pockets	Picture books	Comic picture books
				5 rows	5 rows	5 rows	3 rows	2 rows
*1	Single	750	100 x 300	80	60	260	-	-
*2	Single	750	200 x 300	80	60	260	90	40
*3	Single	750	200 x 400	120	84	340	120	50
				2 x 5 rows	2 x 5 rows	2 x 5 rows	3 rows	2 rows
*4	Double	750	200 x 400	104	76	320	-	-

Capacity examples for 900 mm fixed single/double browser (see page 169)

	Type	Module	H x D mm	CD cases	DVD cases	CD pockets	Picture books	Comic picture books
				6 rows	6 rows	6 rows	4 rows	3 rows
*1	Single	900	100 x 300	120	90	390	-	-
*2	Single	900	200 x 300	120	90	390	120	60
*3	Single	900	200 x 400	180	126	510	180	75
				2 x 6 rows	2 x 6 rows	2 x 6 rows	4 rows	3 rows
*4	Double	900	200 x 400	156	114	480	-	-

Capacity examples for 900 mm single/double browser with pull-out (see page 169)

	Type	Module	H x D mm	CD cases	DVD cases	CD pockets	Picture books	Comic picture books
				6 rows	6 rows	6 rows	4 rows	3 rows
*1	Single	900	100 x 300	100	75	325	-	-
*2	Single	900	200 x 300	100	75	325	120	60
*3	Single	900	200 x 400	150	105	425	160	75
				2 x 6 rows	2 x 6 rows	2 x 6 rows	4 rows	3 rows
*4	Double	900	200 x 400	130	95	400	-	-

Capacity examples for 500/750/900/1000 mm AV steel browser (see page 170-171)

Module	Depth mm	CD/DVD cases		Module	Depth mm	CD/DVD cases
500	250	60		500	300	72
750	250	80		750	300	96
900	250	100		900	300	120
1000	250	120		1000	300	144

FUNCTIONS

DISPLAY & STORAGE

If the steel magazine display is placed at the bottom of the shelving and equipped with either plinth or castors, we recommend ordering a D400 mm shelf as bottom shelf, as the shelf inside the magazine display is only D300 mm.

Steel magazine display - with 1 tip up sloping shelf

Incl. fittings. W900 x H400 x D400 mm. For storage of horizontally piled magazines or vertical binders (up to 320 mm in height).

Module mm	Shelf depth mm	Item no.	
900	300	S14702B4B433	-
900	400	S14702B4B435	-

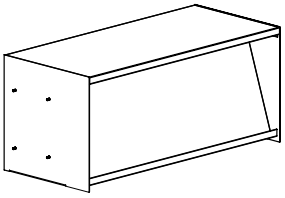

Steel magazine display - with 1 tip up sloping shelf and 3 moveable dividers

Incl. fittings. W900 x H400 x D400 mm. For separate storage of horizontally piled magazines or vertical binders (up to 320 mm in height). Dividers can be moved 50 mm either way.

Module mm	Shelf depth mm	Item no.	
900	300	S14703B4B433	-
900	400	S14703B4B435	-

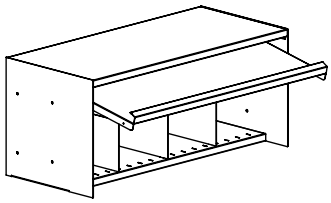

Steel magazine display - with 3 tip up sloping shelves

Incl. fittings. W900 x H400 x D400 mm. For separate storage of either magazines piled horizontally or vertical binders (up to 320 mm in height).

Module mm	Shelf depth mm	Item no.	
900	300	S14704B4B433	-
900	400	S14704B4B435	-

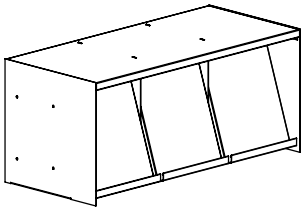

Steel magazine box - Unibox

H320 x D260 x W320 mm. Box and flap lacquered steel. With transparent antireflex foil. Recommended for use on D250 mm steel shelf with/without backedge and wooden shelf without backedge. Can be used on D300 mm shelves. With space for storage of magazines piled horizontally 140 mm.

Design	Back wall	Item no.
Plain	Yes	S017018W788W
Plain	No	S017008W788W
With holes	Yes	S017038W788W
With holes	No	S017028W788W
With slots	Yes	S017058W788W
With slots	No	S017048W788W

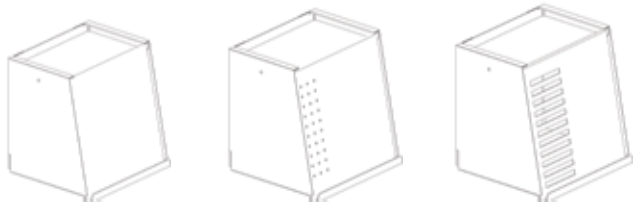

Steel magazine box - Minibox

H320 x D260 x W238 mm. Box and flap lacquered steel. With transparent antireflex foil, rubber mat and 1 divider. Recommended for use on D250 mm steel shelf with/without backedge and wooden shelf without backedge. Can be used on D300 mm shelves. Upright storage of magazines. With space for storage of magazines piled vertically 140 mm.

Item no.	
S017078W786O	-

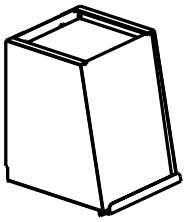

Steel magazine flap

H340 mm (without shelf). Lacquered steel. Min. height between shelves must be 327 mm. To be screwed into panels. Effective lever mechanism keeps the open flap up. Easily retrofitted for single- and double-sided shelves. Recommended to use with back panels. With space for storage of magazines piled horizontally 160 mm.

Module mm	Depth mm	Item no.	
500	250	S147059G12	-
500	300	S147059G13	-
500	400	S147059G15	-
750	250	S147059G22	-
750	300	S147059G23	-
750	400	S147059G25	-
900	250	S147059G32	-
900	300	S147059G33	-
900	400	S147059G35	-
1000	250	S147059G42	-
1000	300	S147059G43	-
1000	400	S147059G45	-

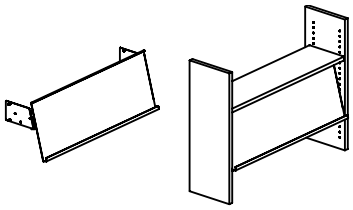

FUNCTIONS

DISPLAY & STORAGE - FOR SHELVES

Steel magazine display

H300 mm. With slanted back and additional side stop. A double front edge keeps this collector flush with the front edge of the shelf. With slip stop to prevent the display from slipping on steel shelves.

Size	Width mm	Item no.	
DIN A4	220	S017088C64	-
DIN A3	440	S017088CC8	-

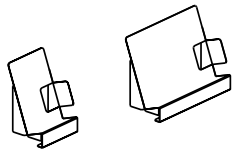

Steel magazine divider

H320 x W95 x D240 mm. Single, slanted element connectable side by side via plug-in connections. For bay W700 mm, use 6 dividers. For bay W900 mm, use 8 dividers. For bay W1000 mm, use 9 dividers.

Size	Item no.	
DIN A4	S017098W6O2N	-

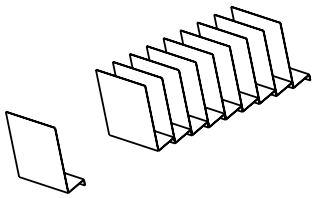

Steel U-storage

H250 x W145 x D220 mm.
Multi-functional storage use.

Item no.	
S017106Y6441	-

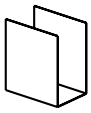

hobby
husvagn & camping
Hifi
DRÖMHUS
TRÄDGÅRD
Antik & Auktion
YOGA
iFORM
Båtägande
FEMINA
FISKE
Forskning Framsteg
SKOGEN BRINNA
Fotografen
Kattliv

BCI

FUNCTIONS

BOOK SUPPORTS

Backedge book support - for Sx1

Nickel plated steel, Ø6 mm, with a nylon glider.

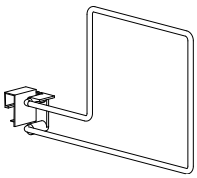

Shelf depth mm	Books left/right of book support	Height	Item no.	
250	Left	16,3	S017754J2	-
300	Left	16,3	S017754J3	-
250	Left (high)	24,3	S017756R2	-
300	Left (high)	24,3	S017756R3	-
250	Right	16,3	S017764J2	-
300	Right	16,3	S017764J3	-

Hanging book support - for S2 and W2 with rail

Available in chrome steel or standard steel colours.

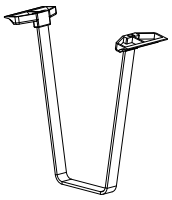

Height mm	Item no.	
200	S017775K	-
250	S017776Y	-

Rail for fixing hanging book support under W2

Fix underneath wooden shelf.
For book support B40112x.
Incl. fittings

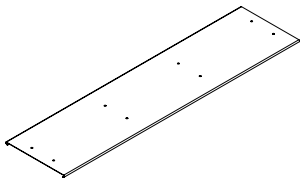

Module	Item no.	
750	S017782	-
900	S017783	-

Hanging book support - for SI3, SI4 & ST4

Chromed round steel with unbreakable plastic sliders.
Easy adjustable.

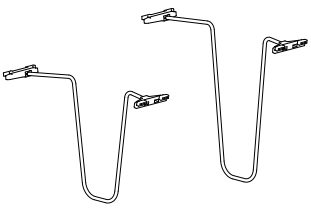

Height mm	Shelf depth mm	Item no.	
220	250	S01779642	-
220	300	S01779643	-
280	250	S017797S2	-
280	300	S017797S3	-

Divider for hanging book support

H250 x D240 mm. White plastic. For sliding onto hanging book support S01779. The divider rests upon the shelf. Is ideal for loose-leaf material, brochures, music books etc.

	Item no.	
	S017806Y6O	-

Steel angled book support

W150 x H150 x D150 mm.

	Item no.	
	S01784464646	-

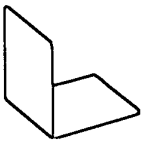

Steel angled book support

W120 x D150 mm.

Height mm	Item no.	
175	S017814V463C	-
240	S017816O463C	-

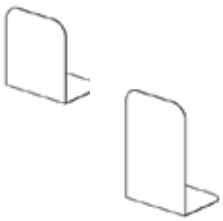

Steel angled book support - with shelf attachment

W150 x H200 x D150 mm.
Attaches onto front of shelf.
With label.

Height mm	Books left/right of book support	Item no.	
200	Right	S017835K4646	-
200	Left	S017825K4646	-

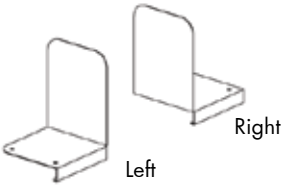

FUNCTIONS

SIGNAGE FOR FRONT OF STEEL AND WOODEN SHELVES

Plastic clip-on label holder - for S1/ST1 with 25 mm frontedge

H25 mm. Incl. white label. Can glide along shelf.

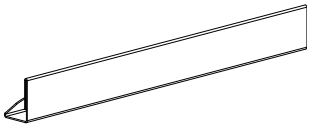

Width mm		Item no.	
220		S018800P64	-

Plastic clip-on label holder - for S2/ST2

H25 mm. Incl. white label. Can glide along shelf.

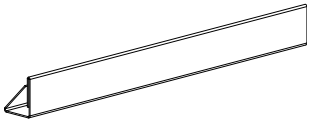

Width mm		Item no.	
213		E3381	-

Plastic clip-on label holder - for S3/S4/W3/W4/WB3/WB4

H21 mm. Transparent, antire-flective plastic. Incl. white label. Clips into groove underneath steel or wooden shelf. Can glide along shelf.

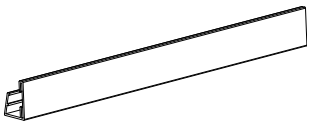

Width- mm		Item no.	
105	Plastic clip-on label holder	S018810L2X	-
210	Plastic clip-on label holder	S018810L5U	-
104	White sheet w. 13 labels (spare part)	S018882X	-
209	White sheet w. 13 labels (spare part)	S018885U	-

Plastic clip-on label holder - for ST4 & S4

H50 mm. Transparent, antire-flective plastic. Incl. white label. Clips into groove underneath steel or wooden shelf. Can glide along shelf.

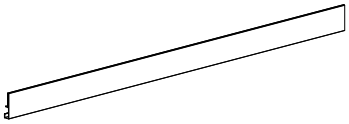

Module mm		Item no.	
500	Plastic clip-on label holder	S148821E1	-
750	Plastic clip-on label holder	S148821E2	-
900	Plastic clip-on label holder	S148821E3	-
1000	Plastic clip-on label holder	S148821E4	-
1000	Label (spare part)	S14889194	-

Self-adhesive plastic label holder - for S1/S2/S3/S4/ST1/ST2/ST3

H20 mm. Transparent, antireflective plastic. Incl. white label.

Width mm	Item no.	
147	S018830K43	-
200	S018830K5K	-

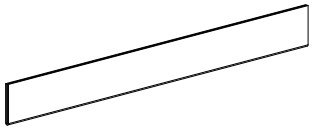

Magnetic plastic label holder - for S1/S2/S3/S4/ST2/ST3

H20 mm. Transparent, antiflective plastic. Incl. white label. Attach to steel shelves with smooth edge.

Width mm		Item no.	
210	Self-adhesive plasstic label holder	S018840K5U	-
209	White sheet w. 13 labels (spare part)	S018885U	-

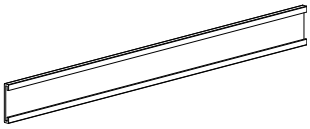

Magnetic shelf label - for ST1 with 47 mm frontedge

H40 mm. Black. Attach to steel shelves with smooth edge.

Width mm	Item no.	
300	S01885148C	-

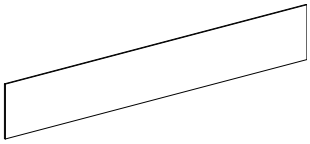

Steel label holder

H26 x W150 x D131 mm. Steel with transparent, antiflective plastic. Incl. white label. Universal use, simply place on shelf where needed.

Item no.	
S018860Q3N46	-

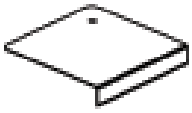

FUNCTIONS

SIGNAGE FOR END PANEL

End panel signage for wooden end panel - flat

	Format	Item no.	
Fastened to the end panel with screws. The sign has an acrylic film for insertion of text slide.	A4 vertical/upright format	S0187002	-

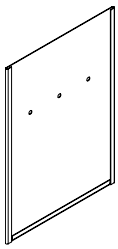

BCI

CASTORS

CASTOR FRAME & CASTOR PLATE

We recommend having a maximum of 3 adjoining bays mounted on castors.

Castor frame set with visible castors

A set of 2 frames and 4 Ø75 mm castors. To be used with double-sided panels WP1, WP2, WP3, WP4 and back panels WPB1/WBP2. Max. height 1520 mm. Order at least one castor frame with brakes.

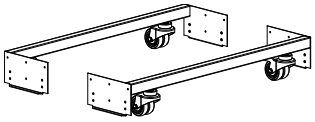

Module mm	x castors with brake	Item no.	
500	0	S1490010	-
500	2	S1490011	-
750	0	S1490020	-
750	2	S1490021	-
900	0	S1490030	-
900	2	S1490031	-
1000	0	S1490040	-
1000	2	S1490041	-

Castors for visible castor frame set

Spare part. H112 mm, Ø75 mm. Max 90 kg. per castor.

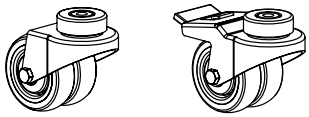

Type	Item no.	
Without brake	S019050	-
With brake	S019051	-

Castor frame set with hidden castors and steel plinth

A set of 2 frames, 4 x Ø35 mm castors without brakes and 2 steel plinths. To be used with double-sided panels WP1, WP2, WP3, WP4 and back panels WPB1/WBP2. Max. height 1520 mm.

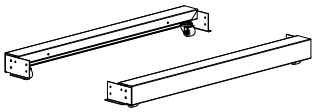

Module mm	Item no.	
500	S149031	-
750	S149032	-
900	S149033	-
1000	S149034	-

Castors for hidden castor frame set

H50 mm, Ø35 mm.
Spare part. Max. 100 kg per castor.

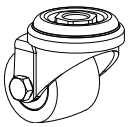

Type	Item no.	
Without brake	S019040	-

CASTORS

CASTOR PLATES

Painted and veneered castor plates are FSC-certified.

Double-sided wooden castor plate

With 4/6/8 Ø80 mm castors, 2 of which are with brakes. To be used with double-sided panels for castor plate WP5/WP6/WP7/WP8 and WPB3/WBP4. Max. height 1520 mm.

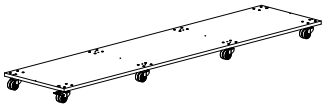

Module mm	Depth mm	No of bays	Item no.	Melamine S14907	Painted S14908	Veneer S14909
500	250	1	S149xx2121	-	-	-
500	250	2	S149xx2122	-	-	-
500	250	3	S149xx2123	-	-	-
500	300	1	S149xx3121	-	-	-
500	300	2	S149xx3122	-	-	-
500	300	3	S149xx3123	-	-	-
500	400	1	S149xx5121	-	-	-
500	400	2	S149xx5122	-	-	-
500	400	3	S149xx5123	-	-	-
750	250	1	S149xx2221	-	-	-
750	250	2	S149xx2222	-	-	-
750	250	3	S149xx2223	-	-	-
750	300	1	S149xx3221	-	-	-
750	300	2	S149xx3222	-	-	-
750	300	3	S149xx3223	-	-	-
750	400	1	S149xx5221	-	-	-
750	400	2	S149xx5222	-	-	-
750	400	3	S149xx5223	-	-	-
900	250	1	S149xx2321	-	-	-
900	250	2	S149xx2322	-	-	-
900	300	1	S149xx3321	-	-	-
900	300	2	S149xx3322	-	-	-
900	400	1	S149xx5321	-	-	-
900	400	2	S149xx5322	-	-	-
1000	250	1	S149xx2421	-	-	-
1000	250	2	S149xx2422	-	-	-
1000	300	1	S149xx3421	-	-	-
1000	300	2	S149xx3422	-	-	-
1000	400	1	S149xx5421	-	-	-
1000	400	2	S149xx5422	-	-	-

Castors for castor plate

Spare part. H102 mm, Ø80 mm. Max 200 kg. per castor.

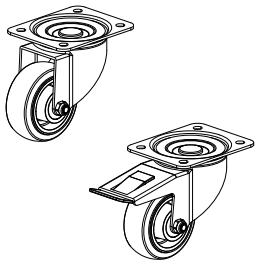

Type	Item no.	
Without brake	S019060	-
With brake	S019061	-

Painted and veneered plinths are FSC-certified.

Wooden plinth

Incl. snapfix. H71 mm. Cannot be used with castors.

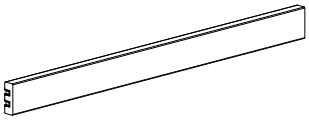

Module mm	Item no.	Melamine S14783	Painted S14784	Veneer S14785
500	S147xx1Z1	-	-	-
750	S147xx1Z2	-	-	-
900	S147xx1Z3	-	-	-
1000	S147xx1Z4	-	-	-

Steel plinth

Incl. screws. H71 mm. Cannot be used with castors.

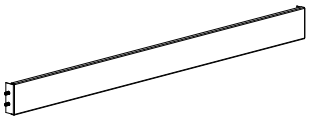

Module mm	Item no.	Steel
500	S147801Z1	-
750	S147801Z2	-
900	S147801Z3	-
1000	S147801Z4	-

WOODEN PANELS

SINGLE-SIDED - WITH ADJUSTABLE FEET - FOR STEEL AND WOODEN TOP SHELF

Painted and veneered panels are FSC-certified.

WP1 - single-sided, left end panel with adjustable feet - for ST1/ST2/ST4 and WT1/WT2

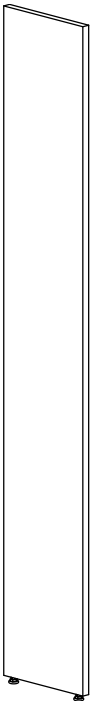

Height mm	Shelf depth mm	Item no.	Melamine S14155	Painted S14156	Veneer S14157
720	250	S141xx1211	-	-	-
720	300	S141xx1311	-	-	-
720	400	S141xx1511	-	-	-
920	250	S141xx2211	-	-	-
920	300	S141xx2311	-	-	-
920	400	S141xx2511	-	-	-
1220	250	S141xx3211	-	-	-
1220	300	S141xx3311	-	-	-
1220	400	S141xx3511	-	-	-
1520	250	S141xx4211	-	-	-
1520	300	S141xx4311	-	-	-
1520	400	S141xx4511	-	-	-
1820	250	S141xx5211	-	-	-
1820	300	S141xx5311	-	-	-
1820	400	S141xx5511	-	-	-
2120	250	S141xx6211	-	-	-
2120	300	S141xx6311	-	-	-
2120	400	S141xx6511	-	-	-

WP1 - single-sided, intermediate panel with adjustable feet - for ST1/ST2/ST4 and WT1/WT2

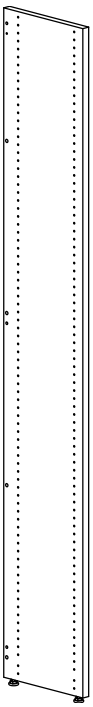

Height mm	Shelf depth mm	Item no.	Melamine S14155	Painted S14156	Veneer S14157
720	250	S141xx1213	-	-	-
720	300	S141xx1313	-	-	-
720	400	S141xx1513	-	-	-
920	250	S141xx2213	-	-	-
920	300	S141xx2313	-	-	-
920	400	S141xx2513	-	-	-
1220	250	S141xx3213	-	-	-
1220	300	S141xx3313	-	-	-
1220	400	S141xx3513	-	-	-
1520	250	S141xx4213	-	-	-
1520	300	S141xx4313	-	-	-
1520	400	S141xx4513	-	-	-
1820	250	S141xx5213	-	-	-
1820	300	S141xx5313	-	-	-
1820	400	S141xx5513	-	-	-
2120	250	S141xx6213	-	-	-
2120	300	S141xx6313	-	-	-
2120	400	S141xx6513	-	-	-

WOODEN PANELS

SINGLE-SIDED - WITH ADJUSTABLE FEET - FOR STEEL AND WOODEN TOP SHELF

Painted and veneered panels are FSC-certified.

WP1 - single-sided right end panel with adjustable feet - for ST1/ST2/ST4 and WT1/WT2

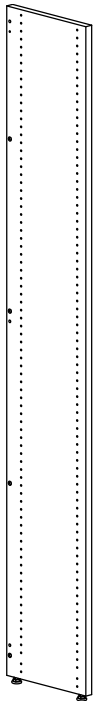

Height mm	Shelf depth mm	Item no.	Melamine S14155	Painted S14156	Veneer S14157
720	250	S141xx1212	-	-	-
720	300	S141xx1312	-	-	-
720	400	S141xx1512	-	-	-
920	250	S141xx2212	-	-	-
920	300	S141xx2312	-	-	-
920	400	S141xx2512	-	-	-
1220	250	S141xx3212	-	-	-
1220	300	S141xx3312	-	-	-
1220	400	S141xx3512	-	-	-
1520	250	S141xx4212	-	-	-
1520	300	S141xx4312	-	-	-
1520	400	S141xx4512	-	-	-
1820	250	S141xx5212	-	-	-
1820	300	S141xx5312	-	-	-
1820	400	S141xx5512	-	-	-
2120	250	S141xx6212	-	-	-
2120	300	S141xx6312	-	-	-
2120	400	S141xx6512	-	-	-

WOODEN PANELS

DOUBLE-SIDED - WITH ADJUSTABLE FEET - FOR STEEL AND WOODEN TOP SHELF

Painted and veneered panels are FSC-certified.

WP1 - double-sided outer end panel with adjustable feet - for ST1/ST2/ST4 and WT1/WT2

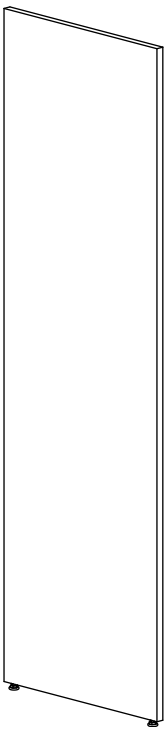

Height mm	Shelf depth mm	Item no.	Melamine S14155	Painted S14156	Veneer S14157
720	250	S141xx1224	-	-	-
720	300	S141xx1324	-	-	-
720	400	S141xx1524	-	-	-
920	250	S141xx2224	-	-	-
920	300	S141xx2324	-	-	-
920	400	S141xx2524	-	-	-
1220	250	S141xx3224	-	-	-
1220	300	S141xx3324	-	-	-
1220	400	S141xx3524	-	-	-
1520	250	S141xx4224	-	-	-
1520	300	S141xx4324	-	-	-
1520	400	S141xx4524	-	-	-
1820	250	S141xx5224	-	-	-
1820	300	S141xx5324	-	-	-
1820	400	S141xx5524	-	-	-
2120	250	S141xx6224	-	-	-
2120	300	S141xx6324	-	-	-
2120	400	S141xx6524	-	-	-

WP1 - double-sided intermediate panel with adjustable feet - for for ST1/ST2/ST4 and WT1/WT2

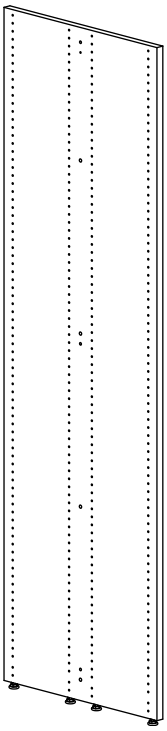

Height mm	Shelf depth mm	Item no.	Melamine S14155	Painted S14156	Veneer S14157
720	250	S141xx1223	-	-	-
720	300	S141xx1323	-	-	-
720	400	S141xx1523	-	-	-
920	250	S141xx2223	-	-	-
920	300	S141xx2323	-	-	-
920	400	S141xx2523	-	-	-
1220	250	S141xx3223	-	-	-
1220	300	S141xx3323	-	-	-
1220	400	S141xx3523	-	-	-
1520	250	S141xx4223	-	-	-
1520	300	S141xx4323	-	-	-
1520	400	S141xx4523	-	-	-
1820	250	S141xx5223	-	-	-
1820	300	S141xx5323	-	-	-
1820	400	S141xx5523	-	-	-
2120	250	S141xx6223	-	-	-
2120	300	S141xx6323	-	-	-
2120	400	S141xx6523	-	-	-

WOODEN PANELS

DOUBLE-SIDED - WITH ADJUSTABLE FEET - FOR STEEL AND WOODEN TOP SHELF

Painted and veneered panels are FSC-certified.

WP2 - double-sided slat outer end panel with milled slat - with adjustable feet - for ST1/ST2/ST4 and WT1/WT2

H1520 has 2 slats, H1820 and 2120 has 3 slats.

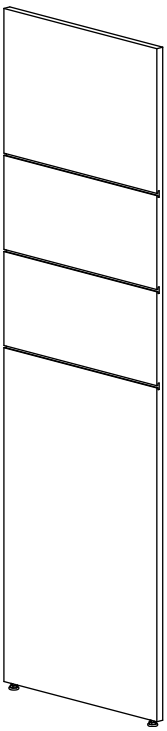

Height mm	Shelf depth mm	Item no.	Painted S14210	Veneer S14211
1520	250	S142xx4224	-	-
1520	300	S142xx4324	-	-
1520	400	S142xx4524	-	-
1820	250	S142xx5224	-	-
1820	300	S142xx5324	-	-
1820	400	S142xx5524	-	-
2120	250	S142xx6224	-	-
2120	300	S142xx6324	-	-
2120	400	S142xx6524	-	-

WOODEN PANELS

SINGLE-SIDED - WITH ADJUSTABLE FEET - WITH OVERLAYING TOP PLATE

Painted and veneered panels are FSC-certified.

WP3 - single-sided left end panel with adjustable feet - for WO1

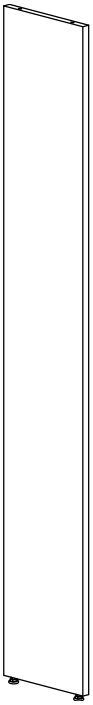

Height mm	Shelf depth mm	Item no.	Melamine S14161	Painted S14162	Veneer S14163
720	250	S141xx1211	-	-	-
720	300	S141xx1311	-	-	-
720	400	S141xx1511	-	-	-
920	250	S141xx2211	-	-	-
920	300	S141xx2311	-	-	-
920	400	S141xx2511	-	-	-
1220	250	S141xx3211	-	-	-
1220	300	S141xx3311	-	-	-
1220	400	S141xx3511	-	-	-
1520	250	S141xx4211	-	-	-
1520	300	S141xx4311	-	-	-
1520	400	S141xx4511	-	-	-
1820	250	S141xx5211	-	-	-
1820	300	S141xx5311	-	-	-
1820	400	S141xx5511	-	-	-
2120	250	S141xx6211	-	-	-
2120	300	S141xx6311	-	-	-
2120	400	S141xx6511	-	-	-

WP3 - single-sided intermediate panel with adjustable feet - for WO1

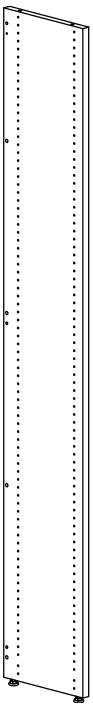

Height mm	Shelf depth mm	Item no.	Melamine S14161	Painted S14162	Veneer S14163
720	250	S141xx1213	-	-	-
720	300	S141xx1313	-	-	-
720	400	S141xx1513	-	-	-
920	250	S141xx2213	-	-	-
920	300	S141xx2313	-	-	-
920	400	S141xx2513	-	-	-
1220	250	S141xx3213	-	-	-
1220	300	S141xx3313	-	-	-
1220	400	S141xx3513	-	-	-
1520	250	S141xx4213	-	-	-
1520	300	S141xx4313	-	-	-
1520	400	S141xx4513	-	-	-
1820	250	S141xx5213	-	-	-
1820	300	S141xx5313	-	-	-
1820	400	S141xx5513	-	-	-
2120	250	S141xx6213	-	-	-
2120	300	S141xx6313	-	-	-
2120	400	S141xx6513	-	-	-

WOODEN PANELS

SINGLE-SIDED - WITH ADJUSTABLE FEET - WITH OVERLAYING TOP PLATE

Painted and veneered panels are FSC-certified.

WP3 - single-sided right end panel with adjustable feet - for WO1

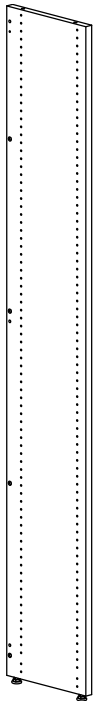

Height mm	Shelf depth mm	Item no.	Melamine S14161	Painted S14162	Veneer S14163
720	250	S141xx1212	-	-	-
720	300	S141xx1312	-	-	-
720	400	S141xx1512	-	-	-
920	250	S141xx2212	-	-	-
920	300	S141xx2312	-	-	-
920	400	S141xx2512	-	-	-
1220	250	S141xx3212	-	-	-
1220	300	S141xx3312	-	-	-
1220	400	S141xx3512	-	-	-
1520	250	S141xx4212	-	-	-
1520	300	S141xx4312	-	-	-
1520	400	S141xx4512	-	-	-
1820	250	S141xx5212	-	-	-
1820	300	S141xx5312	-	-	-
1820	400	S141xx5512	-	-	-
2120	250	S141xx6212	-	-	-
2120	300	S141xx6312	-	-	-
2120	400	S141xx6512	-	-	-

WOODEN PANELS

DOUBLE-SIDED - WITH ADJUSTABLE FEET & OVERLAYING TOP PLATE

Painted and veneered panels are FSC-certified.

WP3 - double-sided outer end panel with adjustable feet - for WO1

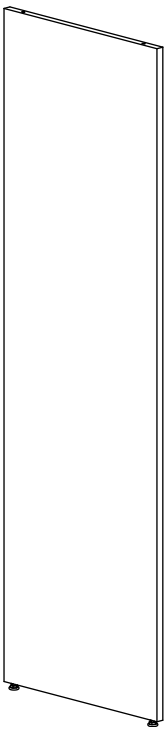

Height mm	Shelf depth mm	Item no.	Melamine S14161	Painted S14162	Veneer S14163
720	250	S141xx1224	-	-	-
720	300	S141xx1324	-	-	-
720	400	S141xx1524	-	-	-
920	250	S141xx2224	-	-	-
920	300	S141xx2324	-	-	-
920	400	S141xx2524	-	-	-
1220	250	S141xx3224	-	-	-
1220	300	S141xx3324	-	-	-
1220	400	S141xx3524	-	-	-
1520	250	S141xx4224	-	-	-
1520	300	S141xx4324	-	-	-
1520	400	S141xx4524	-	-	-
1820	250	S141xx5224	-	-	-
1820	300	S141xx5324	-	-	-
1820	400	S141xx5524	-	-	-
2120	250	S141xx6224	-	-	-
2120	300	S141xx6324	-	-	-
2120	400	S141xx6524	-	-	-

WP3 - double-sided intermediate panel with adjustable feet - for WO1

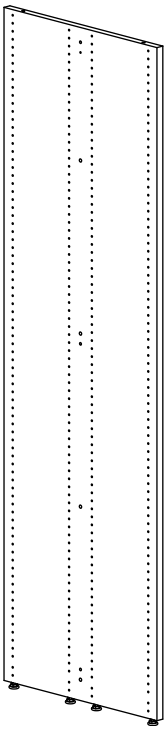

Height mm	Shelf depth mm	Item no.	Melamine S14161	Painted S14162	Veneer S14163
720	250	S141xx1223	-	-	-
720	300	S141xx1323	-	-	-
720	400	S141xx1523	-	-	-
920	250	S141xx2223	-	-	-
920	300	S141xx2323	-	-	-
920	400	S141xx2523	-	-	-
1220	250	S141xx3223	-	-	-
1220	300	S141xx3323	-	-	-
1220	400	S141xx3523	-	-	-
1520	250	S141xx4223	-	-	-
1520	300	S141xx4323	-	-	-
1520	400	S141xx4523	-	-	-
1820	250	S141xx5223	-	-	-
1820	300	S141xx5323	-	-	-
1820	400	S141xx5523	-	-	-
2120	250	S141xx6223	-	-	-
2120	300	S141xx6323	-	-	-
2120	400	S141xx6523	-	-	-

WOODEN PANELS

DOUBLE-SIDED - WITH ADJUSTABLE FEET & OVERLAYING TOP PLATE

Painted and veneered panels are FSC-certified.

WP4 - double-sided slat outer end panel with milled slat and adjustable feet - for WO1

H1520 has 2 slats, H1820 and 2120 has 3 slats.

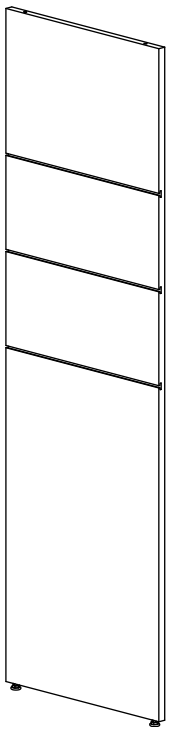

Height mm	Shelf depth mm	Item no.	Painted S14212	Veneer S14213
1520	250	S142xx4224	-	-
1520	300	S142xx4324	-	-
1520	400	S142xx4524	-	-
1820	250	S142xx5224	-	-
1820	300	S142xx5324	-	-
1820	400	S142xx5524	-	-
2120	250	S142xx6224	-	-
2120	300	S142xx6324	-	-
2120	400	S142xx6524	-	-

WOODEN PANELS

DOUBLE-SIDED - FOR CASTOR PLATE & TOP SHELF

Painted and veneered panels are FSC-certified.

WP5 - double-sided outer end panel for castor plate - for ST1/ST2/ST4 and WT1

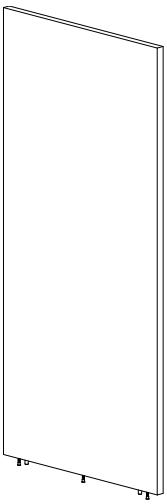

Height mm	Shelf depth mm	Item no.	Melamine S14167	Painted S14168	Veneer S14169
720	250	S141xx1224	-	-	-
720	300	S141xx1324	-	-	-
720	400	S141xx1524	-	-	-
920	250	S141xx2224	-	-	-
920	300	S141xx2324	-	-	-
920	400	S141xx2524	-	-	-
1220	250	S141xx3224	-	-	-
1220	300	S141xx3324	-	-	-
1220	400	S141xx3524	-	-	-
1520	250	S141xx4224	-	-	-
1520	300	S141xx4324	-	-	-
1520	400	S141xx4524	-	-	-

WP5 - double-sided intermediate panel for castor plate - for ST1/ST2/ST4and WT1

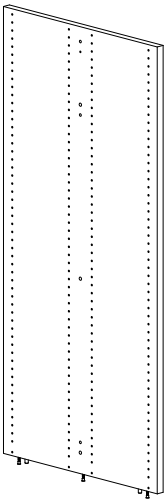

Height mm	Shelf depth mm	Item no.	Melamine S14167	Painted S14168	Veneer S14169
720	250	S141xx1223			
720	300	S141xx1323	-	-	-
720	400	S141xx1523	-	-	-
920	250	S141xx2223	-	-	-
920	300	S141xx2323	-	-	-
920	400	S141xx2523	-	-	-
1220	250	S141xx3223	-	-	-
1220	300	S141xx3323	-	-	-
1220	400	S141xx3523	-	-	-
1520	250	S141xx4223	-	-	-
1520	300	S141xx4323	-	-	-
1520	400	S141xx4523	-	-	-

WOODEN PANELS

DOUBLE-SIDED - FOR CASTOR PLATE & TOP SHELF

Painted and veneered panels are FSC-certified.

WP6 - double-sided slat outer end panel with milled slats - for castor plate - for ST1/ST2/ST4 and WT1

H1520 has 2 slats.

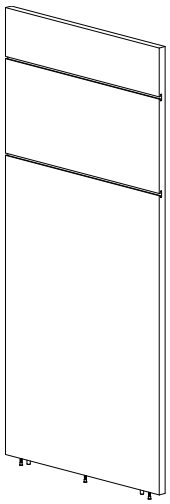

Height mm	Shelf depth mm	Item no.	Painted S14214	Veneer S14215
1520	250	S142xx4224	-	-
1520	300	S142xx4324	-	-
1520	400	S142xx4524	-	-

WOODEN PANELS

DOUBLE-SIDED - FOR CASTOR PLATE & OVERLAYING TOP PLATE

Painted and veneered panels are FSC-certified.

WP7 - double-sided outer end panel for castor plate - for WO1

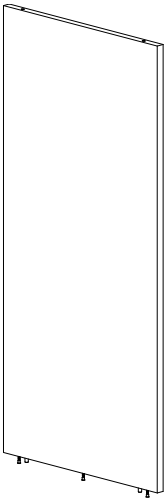

Height mm	Shelf depth mm	Item no.	Melamine S14173	Painted S14174	Veneer S14175
720	250	S141xx1224	-	-	-
720	300	S141xx1324	-	-	-
720	400	S141xx1524	-	-	-
920	250	S141xx2224	-	-	-
920	300	S141xx2324	-	-	-
920	400	S141xx2524	-	-	-
1220	250	S141xx3224	-	-	-
1220	300	S141xx3324	-	-	-
1220	400	S141xx3524	-	-	-
1520	250	S141xx4224	-	-	-
1520	300	S141xx4324	-	-	-
1520	400	S141xx4524	-	-	-

WP7 - double-sided intermediate panel for castor plate - for WO1

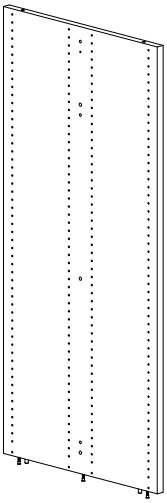

Height mm	Shelf depth mm	Item no.	Melamine S14173	Painted S14174	Veneer S14175
720	250	S141xx1223	-	-	-
720	300	S141xx1323	-	-	-
720	400	S141xx1523	-	-	-
920	250	S141xx2223	-	-	-
920	300	S141xx2323	-	-	-
920	400	S141xx2523	-	-	-
1220	250	S141xx3223	-	-	-
1220	300	S141xx3323	-	-	-
1220	400	S141xx3523	-	-	-
1520	250	S141xx4223	-	-	-
1520	300	S141xx4323	-	-	-
1520	400	S141xx4523	-	-	-

WOODEN PANELS

DOUBLE-SIDED - FOR CASTOR PLATE & OVERLAYING TOP PLATE

Painted and veneered panels are FSC-certified.

WP8 - double-sided slat outer end panel with milled slat - for castor plate - for WO1

H1520 has 2 slats.

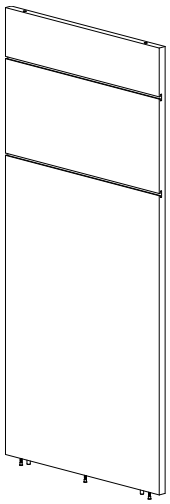

Height mm	Shelf depth mm	Item no.	Painted S14216	Veneer S14217
1520	250	S142xx4224	-	-
1520	300	S142xx4324	-	-
1520	400	S142xx4524	-	-

WOODEN PANELS

WOODEN END PANEL BAYS

Use the panel to create a display area on Lingo shelving system. The end panel bay is easily retrofitted on existing double-sided shelving systems with adjustable feet/castor frame (replace existing end panel with end panel bay). Painted and veneered panels are FSC-certified.

Wooden end panel bay - for bays with top shelf

Fastening material included.

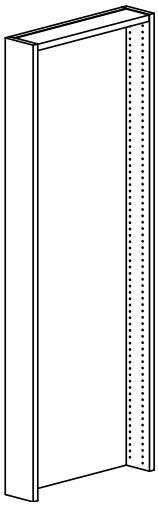

Height mm	Shelf depth mm	Width mm	Item no.	Melamine S14255	Painted S14256	Veneer S14257
720	250	498	S142xx12	-	-	-
720	300	598	S142xx13	-	-	-
720	400	798	S142xx15	-	-	-
920	250	498	S142xx22	-	-	-
920	300	598	S142xx23	-	-	-
920	400	798	S142xx25	-	-	-
1220	250	498	S142xx32	-	-	-
1220	300	598	S142xx33	-	-	-
1220	400	798	S142xx35	-	-	-
1520	250	498	S142xx42	-	-	-
1520	300	598	S142xx43	-	-	-
1520	400	798	S142xx45	-	-	-
1820	250	498	S142xx52	-	-	-
1820	300	598	S142xx53	-	-	-
1820	400	798	S142xx55	-	-	-
2120	250	498	S142xx62	-	-	-
2120	300	598	S142xx63	-	-	-
2120	400	798	S142xx65	-	-	-

Wooden end panel bay - for bays with overlaying top plate

Fastening material included.

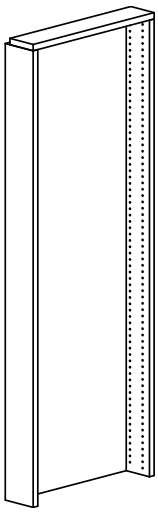

Height mm	Shelf depth mm	Width mm	Item no.	Melamine S14258	Painted S14259	Veneer S14260
720	250	498	S142xx12	-	-	-
720	300	598	S142xx13	-	-	-
720	400	798	S142xx15	-	-	-
920	250	498	S142xx22	-	-	-
920	300	598	S142xx23	-	-	-
920	400	798	S142xx25	-	-	-
1220	250	498	S142xx32	-	-	-
1220	300	598	S142xx33	-	-	-
1220	400	798	S142xx35	-	-	-
1520	250	498	S142xx42	-	-	-
1520	300	598	S142xx43	-	-	-
1520	400	798	S142xx45	-	-	-
1820	250	498	S142xx52	-	-	-
1820	300	598	S142xx53	-	-	-
1820	400	798	S142xx55	-	-	-
2120	250	498	S142xx62	-	-	-
2120	300	598	S142xx63	-	-	-
2120	400	798	S142xx65	-	-	-

The functions below are suited for hanging on wooden end panel bays.

Steel display shelf for wooden end panel bay

H280 mm. Incl. fittings.

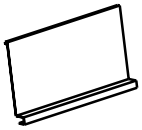

Width mm	Shelf depth mm	Item no.	Steel
498	250	S142612	-
598	300	S142613	-
798	400	S142615	-

CONNECTION ELEMENTS

WOODEN BACK PANELS - FOR ADJUSTABLE FEET

Painted and veneered panels are FSC-certified.

WBP1 - high wooden back panel - for ST1 (standard depth)/ST2/ST4, WT1 (standard depth) and WO1

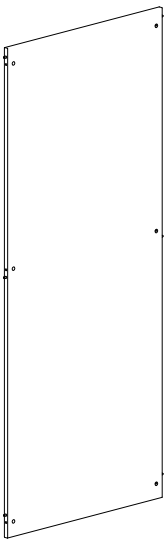

Height mm	Module mm	Item no.	Melamine S14040	Painted S14041	Veneer S14042
720	500	S140xx11	-	-	-
720	750	S140xx12	-	-	-
720	900	S140xx13	-	-	-
720	1000	S140xx14	-	-	-
920	500	S140xx21	-	-	-
920	750	S140xx22	-	-	-
920	900	S140xx23	-	-	-
920	1000	S140xx24	-	-	-
1220	500	S140xx31	-	-	-
1220	750	S140xx32	-	-	-
1220	900	S140xx33	-	-	-
1220	1000	S140xx34	-	-	-
1520	500	S140xx41	-	-	-
1520	750	S140xx42	-	-	-
1520	900	S140xx43	-	-	-
1520	1000	S140xx44	-	-	-
1820	500	S140xx51	-	-	-
1820	750	S140xx52	-	-	-
1820	900	S140xx53	-	-	-
1820	1000	S140xx54	-	-	-
2120	500	S140xx61	-	-	-
2120	750	S140xx62	-	-	-
2120	900	S140xx63	-	-	-
2120	1000	S140xx64	-	-	-

WBP2 - low wooden back panel - for ST1 (full depth & double-sided) and WT2/WT3 (full depth & double-sided)

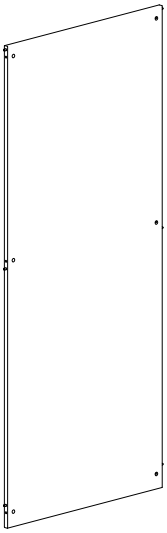

Height mm	Module mm	Item no.	Melamine S14043	Painted S14044	Veneer S14045
720	500	S140xx11	-	-	-
720	750	S140xx12	-	-	-
720	900	S140xx13	-	-	-
720	1000	S140xx14	-	-	-
920	500	S140xx21	-	-	-
920	750	S140xx22	-	-	-
920	900	S140xx23	-	-	-
920	1000	S140xx24	-	-	-
1220	500	S140xx31	-	-	-
1220	750	S140xx32	-	-	-
1220	900	S140xx33	-	-	-
1220	1000	S140xx34	-	-	-
1520	500	S140xx41	-	-	-
1520	750	S140xx42	-	-	-
1520	900	S140xx43	-	-	-
1520	1000	S140xx44	-	-	-
1820	500	S140xx51	-	-	-
1820	750	S140xx52	-	-	-
1820	900	S140xx53	-	-	-
1820	1000	S140xx54	-	-	-
2120	500	S140xx61	-	-	-
2120	750	S140xx62	-	-	-
2120	900	S140xx63	-	-	-
2120	1000	S140xx64	-	-	-

Painted and veneered panels are FSC-certified.

WBP3 - high wooden back panel - for ST1 (standard depth)/ST2/ST4, WT1 (standard depth) and WO1

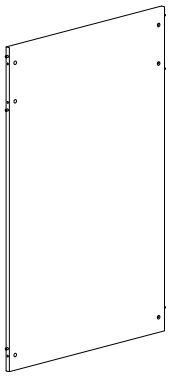

Height mm	Module mm	Item no.	Melamine S14052	Painted S14053	Veneer S14054
720	500	S140xx11	-	-	-
720	750	S140xx12	-	-	-
720	900	S140xx13	-	-	-
720	1000	S140xx14	-	-	-
920	500	S140xx21	-	-	-
920	750	S140xx22	-	-	-
920	900	S140xx23	-	-	-
920	1000	S140xx24	-	-	-
1220	500	S140xx31	-	-	-
1220	750	S140xx32	-	-	-
1220	900	S140xx33	-	-	-
1220	1000	S140xx34	-	-	-
1520	500	S140xx41	-	-	-
1520	750	S140xx42	-	-	-
1520	900	S140xx43	-	-	-
1520	1000	S140xx44	-	-	-

WBP4 - low wooden back panel - for ST1 (full depth & double-sided) and WT2/WT3 (full depth & double-sided)

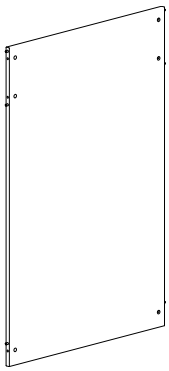

Height mm	Module mm	Item no.	Melamine S14055	Painted S14056	Veneer S14057
720	500	S140xx11	-	-	-
720	750	S140xx12	-	-	-
720	900	S140xx13	-	-	-
720	1000	S140xx14	-	-	-
920	500	S140xx21	-	-	-
920	750	S140xx22	-	-	-
920	900	S140xx23	-	-	-
920	1000	S140xx24	-	-	-
1220	500	S140xx31	-	-	-
1220	750	S140xx32	-	-	-
1220	900	S140xx33	-	-	-
1220	1000	S140xx34	-	-	-
1520	500	S140xx41	-	-	-
1520	750	S140xx42	-	-	-
1520	900	S140xx43	-	-	-
1520	1000	S140xx44	-	-	-

CONNECTION ELEMENTS

STEEL BACK FRAME & CROSS BRACES

Steel back frame

Use for heights: 720/920/1220/1820/2120 mm. With fittings.

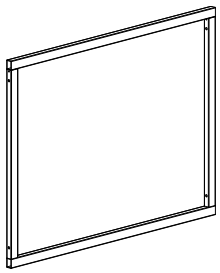

Module mm	Bay	Item no.	
500	Starter	S140001101	-
750	Starter	S140002101	-
900	Starter	S140003101	-
1000	Starter	S140004101	-
500	Add-on	S140001102	-
750	Add-on	S140002102	-
900	Add-on	S140003102	-
1000	Add-on	S140004102	-

Galvanized cross braces - low

Use for heights: 720/920/1220 mm.
For 1220 mm - middle shelf must be screwed on to the end panel when cross brace are used.

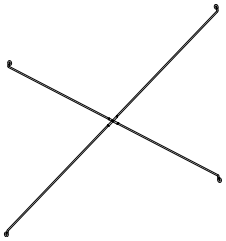

Module mm	Item no.	
500	S1401511	-
750	S1401521	-
900	S1401531	-
1000	S1401541	-

Galvanized cross braces - high

Use for heights: 1520/1820/2120 mm
Middle shelf must be screwed on to the end panel when cross brace are used.

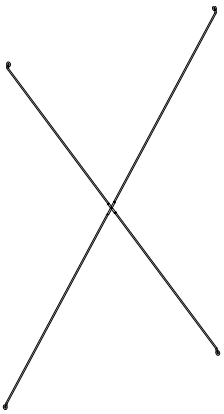

Module mm	Item no.	
500	S1401512	-
750	S1401522	-
900	S1401532	-
1000	S1401542	-

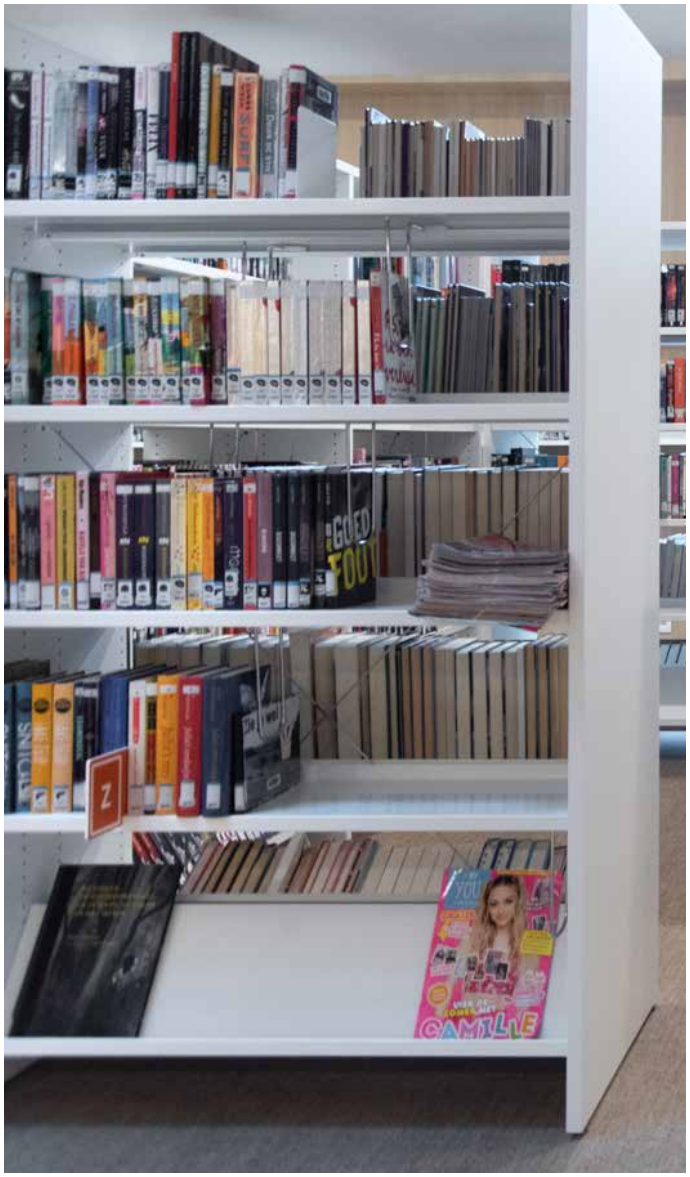
GOED
EET
CAMILLE

600
Teknik och
medicin
OMVÅRDNAD
BRYSON I
NÖGAMEL

BCI

The Book LED lighting armature can be fitted on wooden top shelves and can be mounted over 1, 2 and 3 bays by use of connect fittings. Continuous runs require connect fitting.

The armature is CE-approved and available in white and steel as standard. For other colours, please ask customer service.

Armature

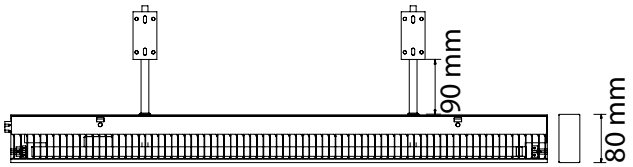

Model showing 2 bearing arms incl. light tube and louvre. Armature housing in aluminium.

Standard bearing arms

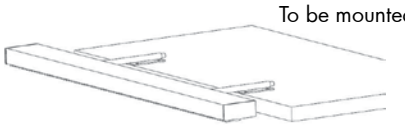

To be mounted on top of top shelf.

Front edge bearing arms

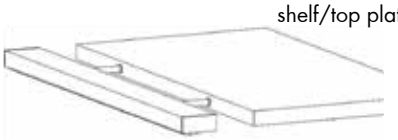

To be mounted on frontedge of predrilled top shelf/top plate (special request)

Below you will find a list of products needed when ordering lighting for 1, 2 or 3 bays. For 4 or more bays, you must use a combination of the armatures for 1, 2 or 3 bays by connecting the armatures with a connect fitting. Eg. for 10 bays, you can either use 5 x 2 bays (with 4 connect fittings) or 3 x 3 bays and 1 x 1 bay (with 3 connect fittings).

1 bay

Use with 2 bearing arms (standard/front edge) and 2 end covers

	Item no. For melamine/ painted shelving		Item no. For veneered shelving	
Armature, module 50	S850010526	-	S850020527	-
Armature, module 75	S850010776	-	S850020777	-
Armature, module 90	S850010926	-	S850020927	-
Armature, module 100	S850011031	-	S850021032	-

2 bays

Use with 2 bearing arms (standard/front edge) and 2 end covers

	Item no. For melamine/ painted shelving		Item no. For veneered shelving	
Armature, module 50 + 50	S850011052	-	S850021054	-
Armature, module 75 + 75	S850011552	-	S850021554	-
Armature, module 90 + 90	S850011852	-	S850021854	-
Armature, module 100 + 100	S850012062	-	S850022064	-

3 bays

Use with 3 bearing arms (standard/front edge) and 2 end covers

	Item no. For melamine/ painted shelving		Item no. For veneered shelving	
Armature, module 50 + 50 + 50	S850011578	-	S850021581	-
Armature, module 75 + 75 + 75	S850012328	-	S850022331	-
Armature, module 90 + 90 + 90	S850012778	-	S850022781	-
Armature, module 100 + 100 + 100	S850013093	-	S850023096	-

Bearing arms

	Item no.	
Standard, 2 pcs.	S850102	-
Standard, 3 pcs.	S850103	-
Front edge, 2 pcs.	S850112	-
Front edge, 3 pcs.	S850113	-

End covers

Item no.	
S850200	-

Cable 3 x 1.5 mm², L2500 mm

Item no.	
S850210	-

Connect fitting

Item no.
S850220

LINGO ROUND SHELVING SYSTEM

26° - STEEL BACK FRAME - ADJUSTABLE FEET - FOR TOP SHELF

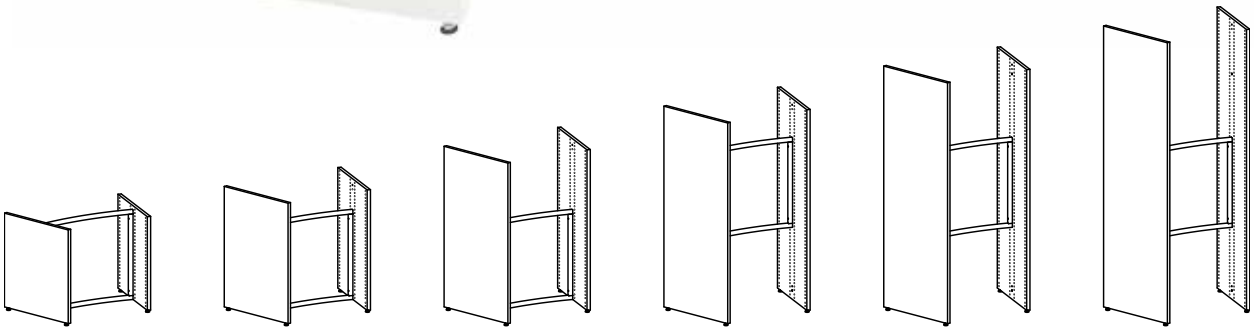

Double-sided starter bay - H720/920/1220/1520/1820/2120 mm

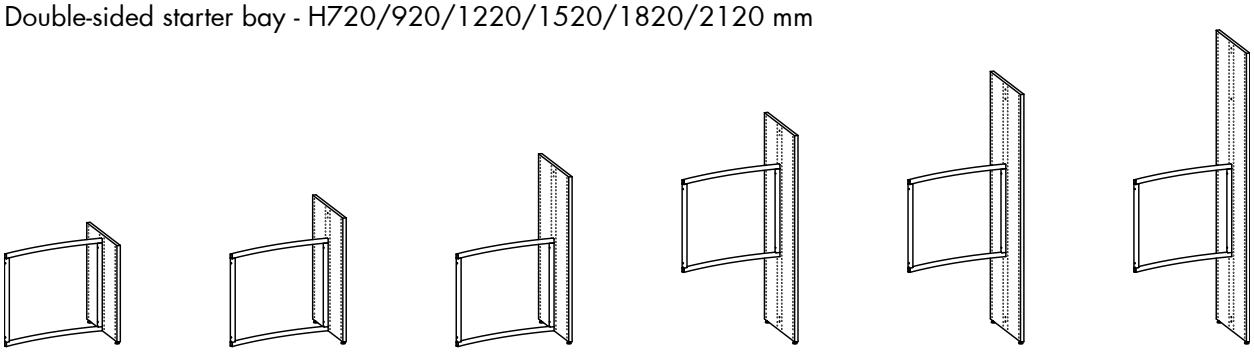

Double-sided add-on bay - H720/920/1220/1520/1820/2120 mm

LINGO ROUND SHELVING SYSTEM

26° - STEEL BACK FRAME - ADJUSTABLE FEET - FOR TOP SHELF
F14500/F14501/F14502/F14506/F14507/F14508

Round shelving system with wooden panels and steel back frame.
To be used with WT5 single-sided and WT7 double-sided top shelf.
Starter bay includes 2 end wooden panels and 1 steel back frame.
Add-on bay includes 1 intermediate wooden panel and 1 steel back frame.

- For top shelves, see pages 251-253.
- For shelves, see pages 259-281.

Painted and veneered Lingo Shelving Systems are FSC-certified.

H720 mm

Shelf depth mm	Item no. Starter bay	Melamine F14500	Painted F14501	Veneer F14502	Item no. Add-on bay	Melamine F14506	Painted F14507	Veneer F14508
30	F145xx13040000000	-	-	-	F145xx13040000000	-	-	-

H920 mm

Shelf depth mm	Item no. Starter bay	Melamine F14500	Painted F14501	Veneer F14502	Item no. Add-on bay	Melamine F14506	Painted F14507	Veneer F14508
30	F145xx23040000000	-	-	-	F145xx23040000000	-	-	-

H1220 mm

Shelf depth mm	Item no. Starter bay	Melamine F14500	Painted F14501	Veneer F14502	Item no. Add-on bay	Melamine F14506	Painted F14507	Veneer F14508
30	F145xx33040000000	-	-	-	F145xx33040000000	-	-	-

H1520 mm

Shelf depth mm	Item no. Starter bay	Melamine F14500	Painted F14501	Veneer F14502	Item no. Add-on bay	Melamine F14506	Painted F14507	Veneer F14508
30	F145xx43040000000	-	-	-	F145xx43040000000	-	-	-

H1820 mm

Shelf depth mm	Item no. Starter bay	Melamine F14500	Painted F14501	Veneer F14502	Item no. Add-on bay	Melamine F14506	Painted F14507	Veneer F14508
30	F145xx53040000000	-	-	-	F145xx53040000000	-	-	-

H2120 mm

Shelf depth mm	Item no. Starter bay	Melamine F14500	Painted F14501	Veneer F14502	Item no. Add-on bay	Melamine F14506	Painted F14507	Veneer F14508
30	F145xx63040000000	-	-	-	F145xx63040000000	-	-	-

LINGO ROUND SHELVING SYSTEM

26° - HIGH STEEL BACK PANEL - ADJUSTABLE FEET - FOR TOP SHELF

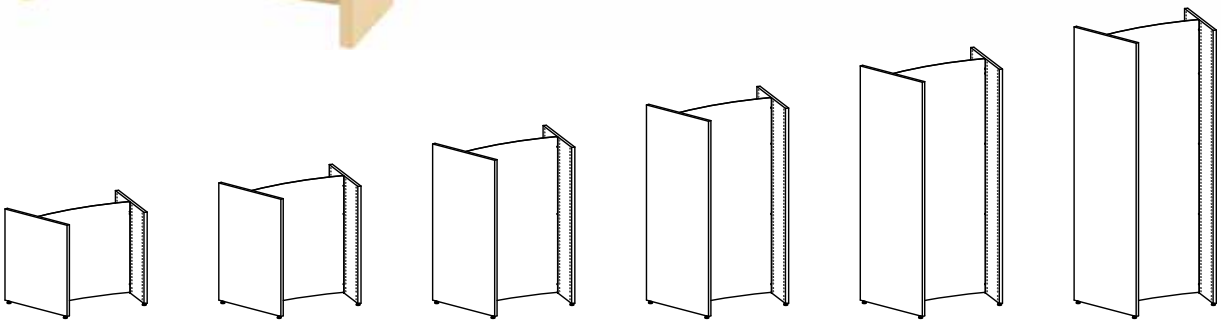

Double-sided starter bay - H720/920/1220/1520/1820/2120 mm

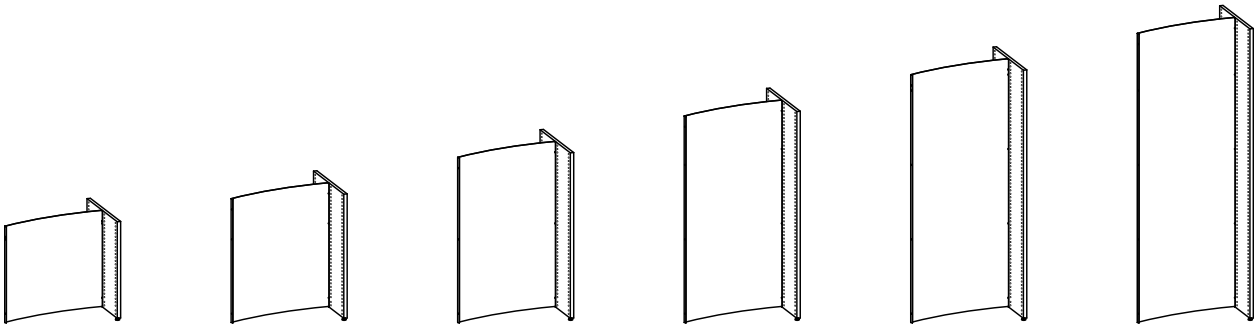

Double-sided add-on bay - H720/920/1220/1520/1820/2120 mm

LINGO ROUND SHELVING SYSTEM

26° - HIGH STEEL BACK PANEL - ADJUSTABLE FEET - FOR TOP SHELF
F14500/F14501/F14502/F14506/F14507/F14508

Round shelving system with wooden panels and high steel back panel.
To be used with WT5 single-sided standard depth top shelf.
Starter bay includes 2 wooden end panels and 1 steel back panel.
Add-on bay includes 1 intermediate wooden panel and 1 steel back panel.

- For top shelves, see pages 251-253.
- For shelves, see pages 259-281.
- For castor frame, see page 283.
- For end panel bay, see page 294.
Painted and veneered Lingo Shelving Systems are FSC-certified.

H720 mm

Shelf depth mm	Item no. Starter bay	Melamine F14500	Painted F14501	Veneer F14502	Item no. Add-on bay	Melamine F14506	Painted F14507	Veneer F14508
30	F145xx13090000000	-	-	-	F145xx13090000000	-	-	-

H920 mm

Shelf depth mm	Item no. Starter bay	Melamine F14500	Painted F14501	Veneer F14502	Item no. Add-on bay	Melamine F14506	Painted F14507	Veneer F14508
30	F145xx23090000000	-	-	-	F145xx23090000000	-	-	-

H1220 mm

Shelf depth mm	Item no. Starter bay	Melamine F14500	Painted F14501	Veneer F14502	Item no. Add-on bay	Melamine F14506	Painted F14507	Veneer F14508
30	F145xx33090000000	-	-	-	F145xx33090000000	-	-	-

H1520 mm

Shelf depth mm	Item no. Starter bay	Melamine F14500	Painted F14501	Veneer F14502	Item no. Add-on bay	Melamine F14506	Painted F14507	Veneer F14508
30	F145xx43090000000	-	-	-	F145xx43090000000	-	-	-

H1820 mm

Shelf depth mm	Item no. Starter bay	Melamine F14500	Painted F14501	Veneer F14502	Item no. Add-on bay	Melamine F14506	Painted F14507	Veneer F14508
30	F145xx53090000000	-	-	-	F145xx53090000000	-	-	-

H2120 mm

Shelf depth mm	Item no. Starter bay	Melamine F14500	Painted F14501	Veneer F14502	Item no. Add-on bay	Melamine F14506	Painted F14507	Veneer F14508
30	F145xx63090000000	-	-	-	F145xx63090000000	-	-	-

LINGO ROUND SHELVING SYSTEM

26° - LOW STEEL BACK PANEL - ADJUSTABLE FEET - FOR TOP SHELF

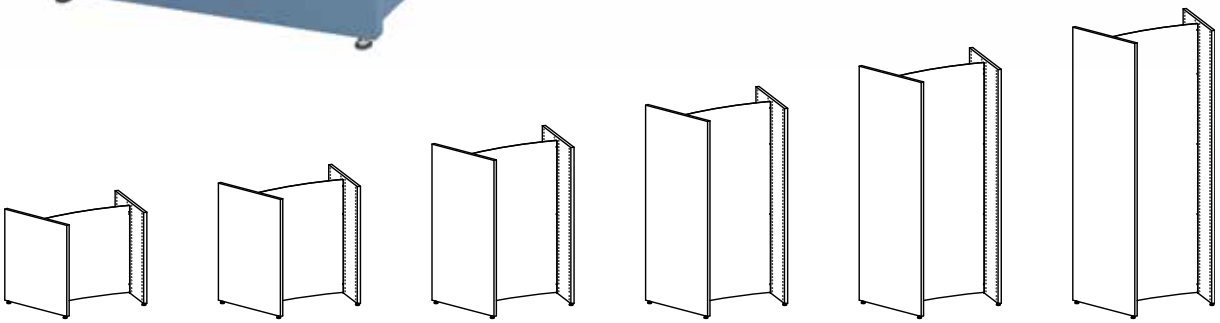

Double-sided freestanding bay - H720/920/1220/1520/1820/2120 mm

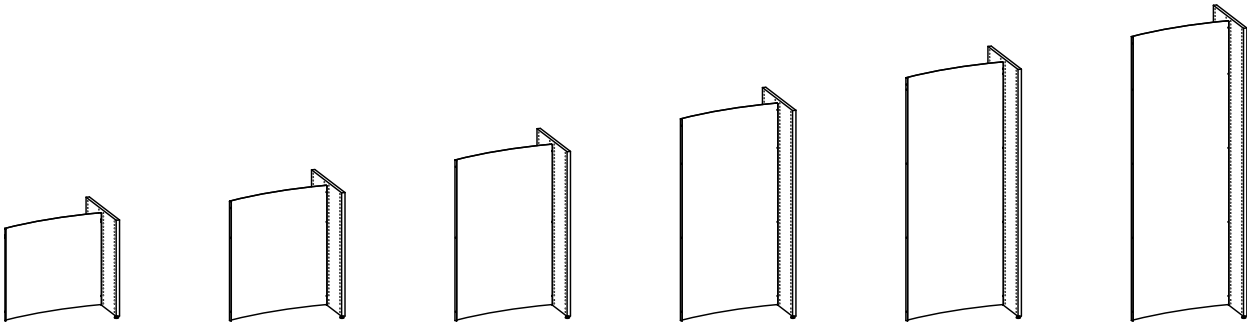

Double-sided intermediate bay - H720/920/1220/1520/1820/2120 mm

LINGO ROUND SHELVING SYSTEM

26° - LOW STEEL BACK PANEL - ADJUSTABLE FEET - FOR TOP SHELF
F14500/F14501/F14502/F14506/F14507/F14508

Round shelving system with wooden panels and low steel back panel.
To be used with WT7 double-sided top shelf.
Starter bay includes 2 end wooden panels and 1 steel back panel.
Add-on bay includes 1 intermediate wooden panel and 1 steel back panel.

- For top shelves, see pages 251-253.
- For shelves, see pages 259-281.
- For plinths, see page 283.

Painted and veneered Lingo Shelving Systems are FSC-certified.

H720 mm

Shelf depth mm	Item no. Starter bay	Melamine F14500	Painted F14501	Veneer F14502	Item no. Add-on bay	Melamine F14506	Painted F14507	Veneer F14508
30	F145xx13080000000	-	-	-	F145xx13080000000	-	-	-

H920 mm

Shelf depth mm	Item no. Starter bay	Melamine F14500	Painted F14501	Veneer F14502	Item no. Add-on bay	Melamine F14506	Painted F14507	Veneer F14508
30	F145xx23080000000	-	-	-	F145xx23080000000	-	-	-

H1220 mm

Shelf depth mm	Item no. Starter bay	Melamine F14500	Painted F14501	Veneer F14502	Item no. Add-on bay	Melamine F14506	Painted F14507	Veneer F14508
30	F145xx33080000000	-	-	-	F145xx33080000000	-	-	-

H1520 mm

Shelf depth mm	Item no. Starter bay	Melamine F14500	Painted F14501	Veneer F14502	Item no. Add-on bay	Melamine F14506	Painted F14507	Veneer F14508
30	F145xx43080000000	-	-	-	F145xx43080000000	-	-	-

H1820 mm

Shelf depth mm	Item no. Starter bay	Melamine F14500	Painted F14501	Veneer F14502	Item no. Add-on bay	Melamine F14506	Painted F14507	Veneer F14508
30	F145xx53080000000	-	-	-	F145xx53080000000	-	-	-

H2120 mm

Shelf depth mm	Item no. Starter bay	Melamine F14500	Painted F14501	Veneer F14502	Item no. Add-on bay	Melamine F14506	Painted F14507	Veneer F14508
30	F145xx63080000000	-	-	-	F145xx63080000000	-	-	-

LINGO ROUND SHELVING SYSTEM

26° - STEEL BACK FRAME - ADJUSTABLE FEET - FOR TOP PLATE

LINGO ROUND SHELVING SYSTEM

26° - STEEL BACK FRAME - ADJUSTABLE FEET - FOR TOP PLATE
F14600/F14601/F14602/F14603/F14604/F14605

Round shelving system with wooden panels and steel back frame.
To be used with WO5 overlaying top plate.
Starter bay includes 2 end wooden panels and 1 steel back frame.
Add-on bay includes 1 intermediate wooden panel and 1 steel back frame.

- For overlaying top plate, see pages 255-258.
- For shelves, see pages 259-281.
- For plinths, see page 283.
- For end panel bays, see page 294.
Painted and veneered Lingo Shelving Systems are FSC-certified.

H720 mm

Shelf depth mm	Item no. Starter bay	Melamine F14600	Painted F14601	Veneer F14602	Item no. Add-on bay	Melamine F14603	Painted F14604	Veneer F14605
30	F146xx13070000000	-	-	-	F146xx13070000000	-	-	-

H920 mm

Shelf depth mm	Item no. Starter bay	Melamine F14600	Painted F14601	Veneer F14602	Item no. Add-on bay	Melamine F14603	Painted F14604	Veneer F14605
30	F146xx23070000000	-	-	-	F146xx23070000000	-	-	-

H1220 mm

Shelf depth mm	Item no. Starter bay	Melamine F14600	Painted F14601	Veneer F14602	Item no. Add-on bay	Melamine F14603	Painted F14604	Veneer F14605
30	F146xx33070000000	-	-	-	F146xx33070000000	-	-	-

H1520 mm

Shelf depth mm	Item no. Starter bay	Melamine F14600	Painted F14601	Veneer F14602	Item no. Add-on bay	Melamine F14603	Painted F14604	Veneer F14605
30	F146xx43070000000	-	-	-	F146xx43070000000	-	-	-

H1820 mm

Shelf depth mm	Item no. Starter bay	Melamine F14600	Painted F14601	Veneer F14602	Item no. Add-on bay	Melamine F14603	Painted F14604	Veneer F14605
30	F146xx53070000000	-	-	-	F146xx53070000000	-	-	-

H2120 mm

Shelf depth mm	Item no. Starter bay	Melamine F14600	Painted F14601	Veneer F14602	Item no. Add-on bay	Melamine F14603	Painted F14604	Veneer F14605
30	F146xx63070000000	-	-	-	F146xx63070000000	-	-	-

LINGO ROUND SHELVING SYSTEM

26° - STEEL BACK PANEL - ADJUSTABLE FEET - FOR TOP PLATE

LINGO ROUND SHELVING SYSTEM

26° - STEEL BACK PANEL - ADJUSTABLE FEET - FOR TOP PLATE
F14600/F14601/F14602/F14603/F14604/F14605

Round shelving system with wooden end panels and steel back panel.
To be used with WO5 overlaying top plate.
Starter bay includes 2 wooden end panels and 1 steel back panel.
Add-on bay includes 1 intermediate wooden panel and 1 steel back panel.

- For overlaying top plate, see pages 255-258.
- For shelves, see pages 259-281.
- For castor frame, see page 283.

Painted and veneered Lingo Shelving Systems are FSC-certified.

H720 mm

Shelf depth mm	Item no. Starter bay	Melamine F14600	Painted F14601	Veneer F14602	Item no. Add-on bay	Melamine F14603	Painted F14604	Veneer F14605
30	F146xx13070000000	-	-	-	F146xx13070000000	-	-	-

H920 mm

Shelf depth mm	Item no. Starter bay	Melamine F14600	Painted F14601	Veneer F14602	Item no. Add-on bay	Melamine F14603	Painted F14604	Veneer F14605
30	F146xx23070000000	-	-	-	F146xx23070000000	-	-	-

H1220 mm

Shelf depth mm	Item no. Starter bay	Melamine F14600	Painted F14601	Veneer F14602	Item no. Add-on bay	Melamine F14603	Painted F14604	Veneer F14605
30	F146xx33070000000	-	-	-	F146xx33070000000	-	-	-

H1520 mm

Shelf depth mm	Item no. Starter bay	Melamine F14600	Painted F14601	Veneer F14602	Item no. Add-on bay	Melamine F14603	Painted F14604	Veneer F14605
30	F146xx43070000000	-	-	-	F146xx43070000000	-	-	-

H1820 mm

Shelf depth mm	Item no. Starter bay	Melamine F14600	Painted F14601	Veneer F14602	Item no. Add-on bay	Melamine F14603	Painted F14604	Veneer F14605
30	F146xx53070000000	-	-	-	F146xx53070000000	-	-	-

H2120 mm

Shelf depth mm	Item no. Starter bay	Melamine F14600	Painted F14601	Veneer F14602	Item no. Add-on bay	Melamine F14603	Painted F14604	Veneer F14605
30	F146xx63070000000	-	-	-	F146xx63070000000	-	-	-

LINGO ROUND SHELVING SYSTEM

26° - STEEL BACK FRAME - CASTOR PLATE - FOR TOP SHELF

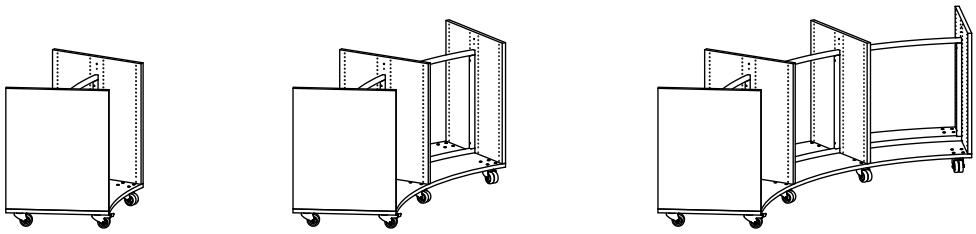

Double-sided H920 mm - 1/2/3 bays

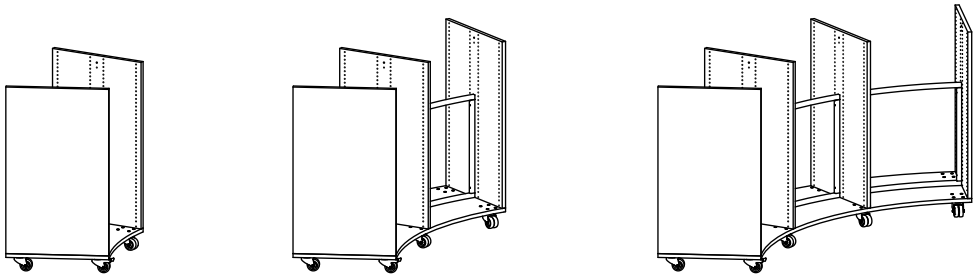

Double-sided H1220 mm - 1/2/3 bays

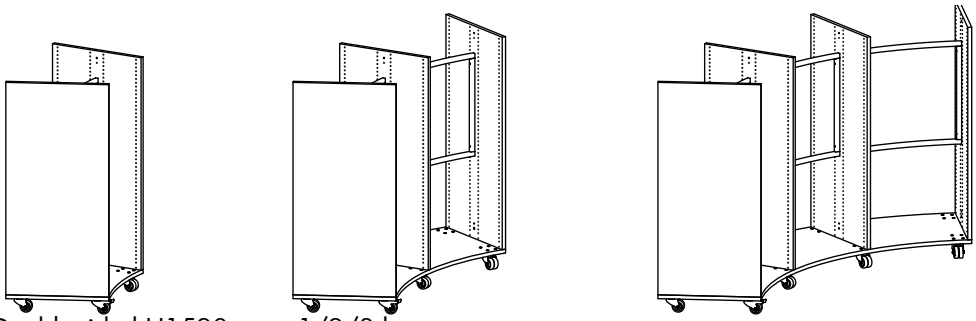

Double-sided H1520 mm - 1/2/3 bays

LINGO ROUND SHELVING SYSTEM

26° - STEEL BACK FRAME - CASTOR PLATE - FOR TOP SHELF
F14800/F14801/F14802

Round shelving system with wooden panels, steel back frame and castor plate.
To be used with WT5 single-sided and WT7 double-sided top shelf.

- For top shelves, see pages 251-253.
- For shelves, see pages 259-281.

Painted and veneered Lingo Shelving Systems are FSC-certified.

H920 mm

No. of bays	Item no.	Melamine F14800	Painted F14801	Veneer F14802
1	F148xx231040000000	-	-	-
2	F148xx232040000000	-	-	-
3	F148xx233040000000	-	-	-

H1220 mm

No. of bays	Item no.	Melamine F14800	Painted F14801	Veneer F14802
1	F148xx331040000000	-	-	-
2	F148xx332040000000	-	-	-
3	F148xx333040000000	-	-	-

H1520 mm

No. of bays	Item no.	Melamine F14800	Painted F14801	Veneer F14802
1	F148xx431040000000	-	-	-
2	F148xx432040000000	-	-	-
3	F148xx433040000000	-	-	-

LINGO ROUND SHELVING SYSTEM

26° - HIGH STEEL BACK PANEL - CASTOR PLATE - FOR TOP SHELF

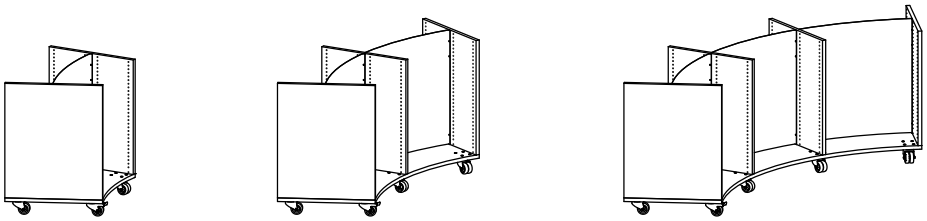

Double-sided H920 mm - 1/2/3 bays

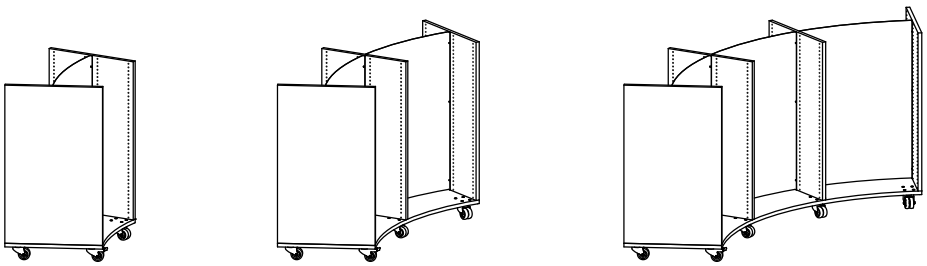

Double-sided H1220 mm - 1/2/3 bays

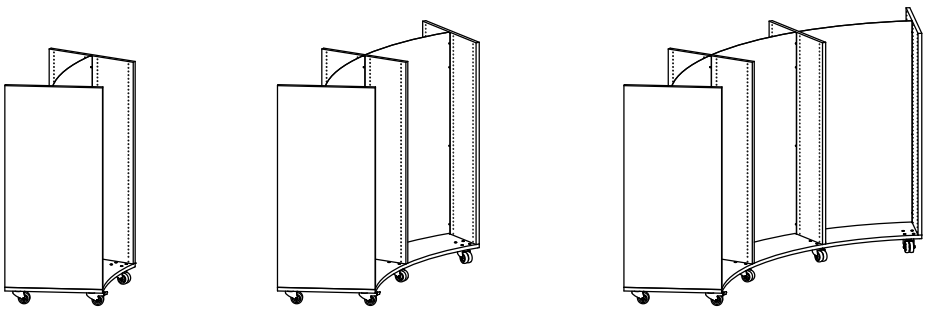

Double-sided H1520 mm - 1/2/3 bays

LINGO ROUND SHELVING SYSTEM

26° - HIGH STEEL BACK PANEL - CASTOR PLATE - FOR TOP SHELF
F14800/F14801/F14802

Round shelving system with wooden panels, high steel back panel and castor plate.
To be used with top shelves WT5 standard depth top shelf.

- For top shelves, see pages 251-253.
- For shelves, see pages 259-281.

Painted and veneered Lingo Shelving Systems are FSC-certified.

H920 mm

No. of bays	Item no.	Melamine F14800	Painted F14801	Veneer F14802
1	F148xx231090000000	-	-	-
2	F148xx232090000000	-	-	-
3	F148xx233090000000	-	-	-

H1220 mm

No. of bays	Item no.	Melamine F14800	Painted F14801	Veneer F14802
1	F148xx331090000000	-	-	-
2	F148xx332090000000	-	-	-
3	F148xx333090000000	-	-	-

H1520 mm

No. of bays	Item no.	Melamine F14800	Painted F14801	Veneer F14802
1	F148xx431090000000	-	-	-
2	F148xx432090000000	-	-	-
3	F148xx433090000000	-	-	-

LINGO ROUND SHELVING SYSTEM

26° - LOW STEEL BACK PANEL - CASTOR PLATE - FOR TOP SHELF

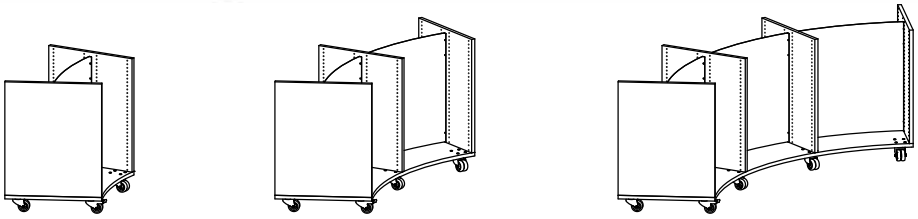

Double-sided H920 mm - 1/2/3 bays

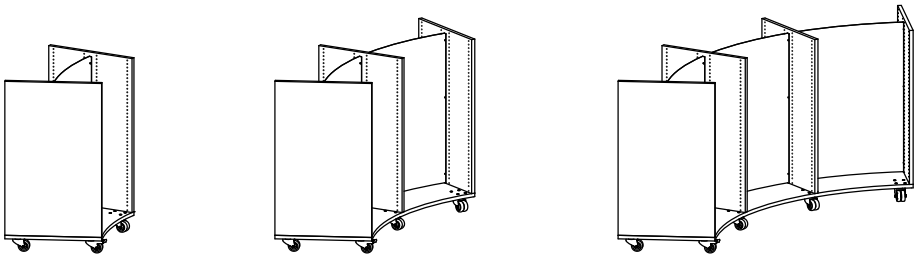

Double-sided H1220 mm - 1/2/3 bays

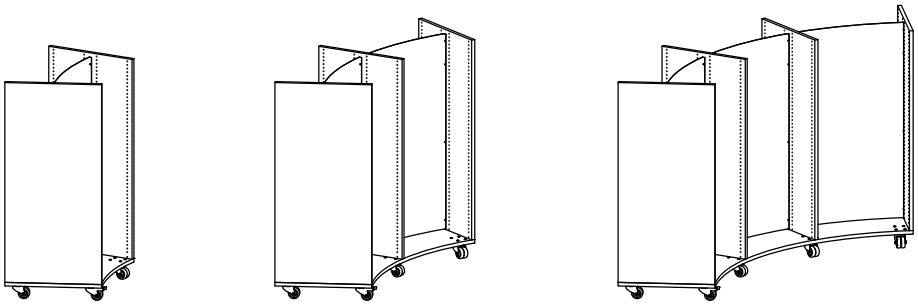

Double-sided H1520 mm - 1/2/3 bays

LINGO ROUND SHELVING SYSTEM

26° - LOW STEEL BACK PANEL - CASTOR PLATE - FOR TOP SHELF
F14800/F14801/F14802

Round shelving system with wooden panels, low steel back panel and castor plate.
To be used with top shelves WT7 double-sided top shelf.

- For top shelves, see pages 251-253.
- For shelves, see pages 259-281.
- For slat panels, see page 284-291 (note slate panel replaces outer panel).

Painted and veneered Lingo Shelving Systems are FSC-certified.

H920 mm

No. of bays	Item no.	Melamine F14800	Painted F14801	Veneer F14802
1	F148xx231080000000	-	-	-
2	F148xx232080000000	-	-	-
3	F148xx233080000000	-	-	-

H1220 mm

No. of bays	Item no.	Melamine F14800	Painted F14801	Veneer F14802
1	F148xx331080000000	-	-	-
2	F148xx332080000000	-	-	-
3	F148xx333080000000	-	-	-

H1520 mm

No. of bays	Item no.	Melamine F14800	Painted F14801	Veneer F14802
1	F148xx431080000000	-	-	-
2	F148xx432080000000	-	-	-
3	F148xx433080000000	-	-	-

LINGO ROUND SHELVING SYSTEM

26° - STEEL BACK FRAME - CASTOR PLATE - FOR OVERLAYING TOP PLATE

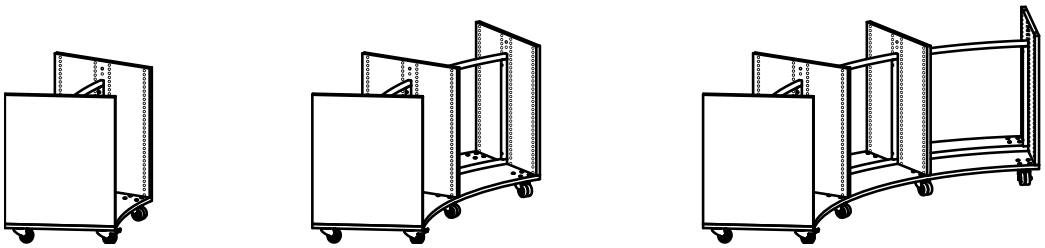

Double-sided H920 mm - 1/2/3 bays

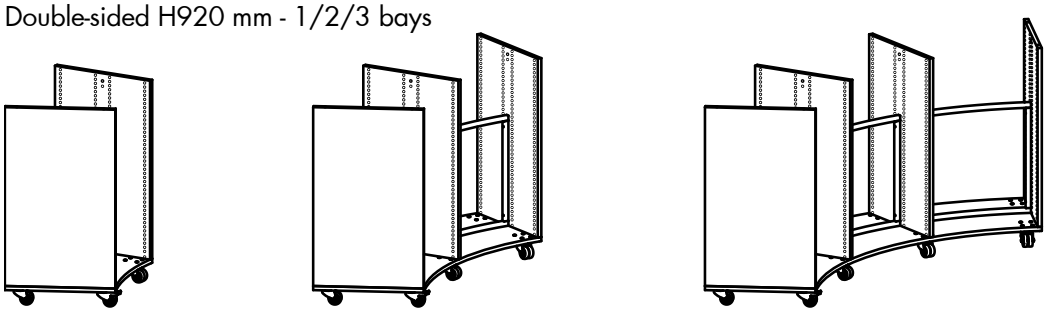

Double-sided H1220 mm - 1/2/3 bays

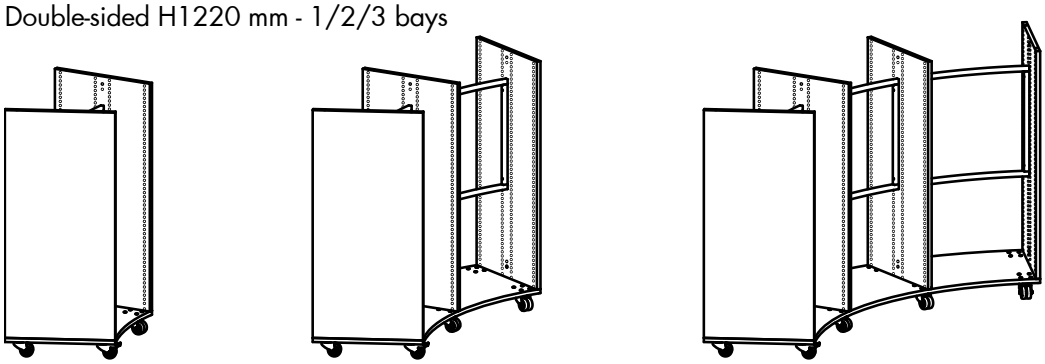

Double-sided H1520 mm - 1/2/3 bays

LINGO ROUND SHELVING SYSTEM

26° - STEEL BACK FRAME - CASTOR PLATE - FOR OVERLAYING TOP PLATE
F14900/F14901/F14902

Round shelving system with wooden panels, steel back frame and castor plate.
To be used with WO5 overlaying top plate.

- For overlaying top plate, see pages 255-258.
- For shelves, see pages 259-281.

Painted and veneered Lingo Shelving Systems are FSC-certified.

H920 mm

No. of bays	Item no.	Melamine F14900	Painted F14901	Veneer F14902
1	F149xx231040000000	-	-	-
2	F149xx232040000000	-	-	-
3	F149xx233040000000	-	-	-

H1220 mm

No. of bays	Item no.	Melamine F14900	Painted F14901	Veneer F14902
1	F149xx331040000000	-	-	-
2	F149xx332040000000	-	-	-
3	F149xx333040000000	-	-	-

H1520 mm

No. of bays	Item no.	Melamine F14900	Painted F14901	Veneer F14902
1	F149xx431040000000	-	-	-
2	F149xx432040000000	-	-	-
3	F149xx433040000000	-	-	-

LINGO ROUND SHELVING SYSTEM

26° - STEEL BACK PANEL - CASTOR PLATE - FOR OVERLAYING TOP PLATE

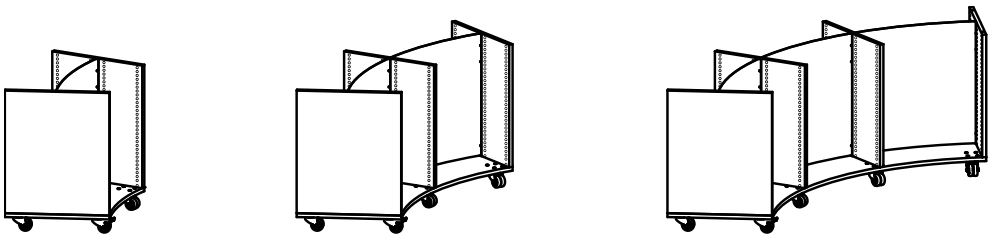

Double-sided H920 mm - 1/2/3 bays

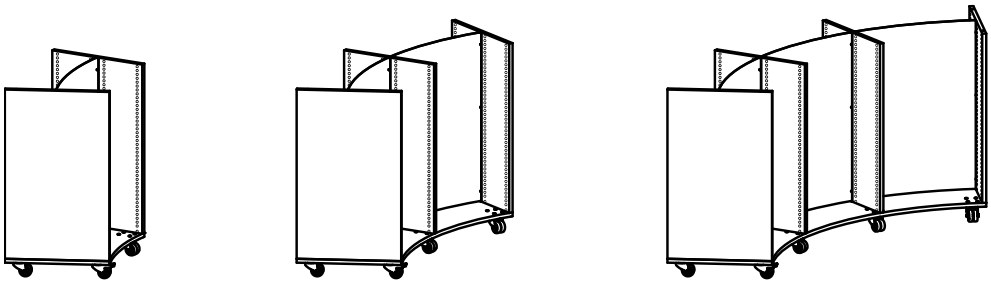

Double-sided H1220 mm - 1/2/3 bays

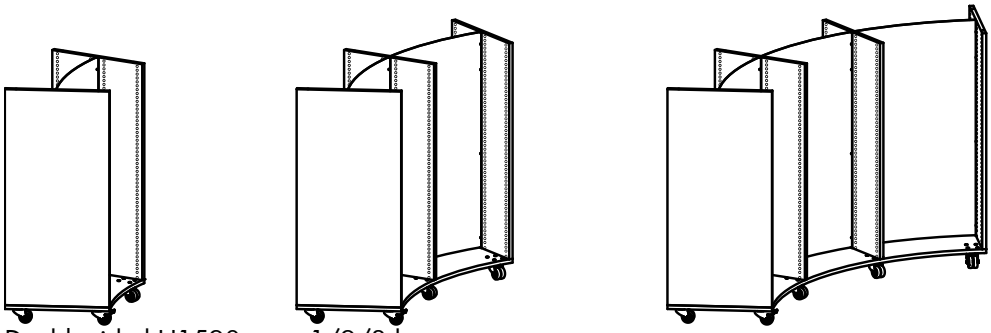

Double-sided H1520 mm - 1/2/3 bays

LINGO ROUND SHELVING SYSTEM

26° - STEEL BACK PANEL - CASTOR PLATE - FOR OVERLAYING TOP PLATE
F14900/F14901/F14902

Round shelving system with wooden panels, steel back panel and castor plate.
To be used with WO5 overlaying top plate.

- For overlaying top plate, see pages 255-258.
- For shelves, see pages 259-281.

Painted and veneered Lingo Shelving Systems are FSC-certified.

H920 mm

No. of bays	Item no.	Melamine F14900	Painted F14901	Veneer F14902
1	F149xx231070000000	-	-	-
2	F149xx232070000000	-	-	-
3	F149xx233070000000	-	-	-

H1220 mm

No. of bays	Item no.	Melamine F14900	Painted F14901	Veneer F14902
1	F149xx331070000000	-	-	-
2	F149xx332070000000	-	-	-
3	F149xx333070000000	-	-	-

H1520 mm

No. of bays	Item no.	Melamine F14900	Painted F14901	Veneer F14902
1	F149xx431070000000	-	-	-
2	F149xx432070000000	-	-	-
3	F149xx433070000000	-	-	-

LINGO ROUND SHELVING SYSTEM

18° - STEEL BACK FRAME - ADJUSTABLE FEET - FOR TOP SHELF

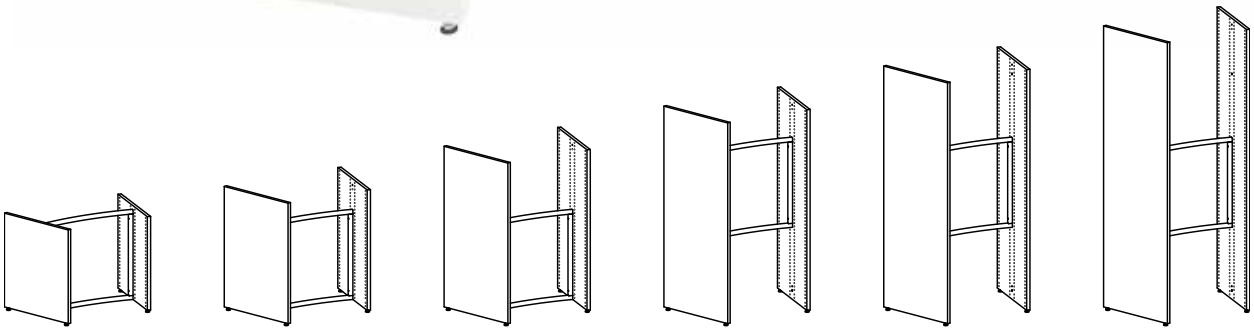

Double-sided starter bay - H720/920/1220/1520/1820/2120 mm

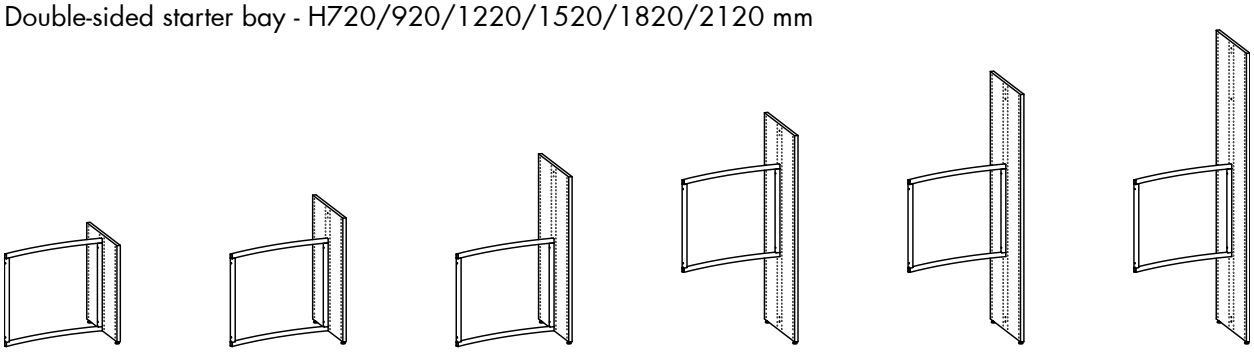

Double-sided add-on bay - H720/920/1220/1520/1820/2120 mm

LINGO ROUND SHELVING SYSTEM

18° - STEEL BACK FRAME - ADJUSTABLE FEET - FOR TOP SHELF
F14512/F14513/F14514/F14518/F14519/F14520

Round shelving system with wooden panels and steel back frame.
To be used with WT5 single-sided and WT7 double-sided top shelf.
Starter bay includes 2 end wooden panels and 1 steel back frame.
Add-on bay includes 1 intermediate wooden panel and 1 steel back frame.

- For top shelves, see pages 251-253.
- For shelves, see pages 259-281.

Painted and veneered Lingo Shelving Systems are FSC-certified.

H720 mm

Shelf depth mm	Item no. Starter bay	Melamine F14512	Painted F14513	Veneer F14514	Item no. Add-on bay	Melamine F14518	Painted F14519	Veneer F14520
30	F145xx13040000000	-	-	-	F145xx13040000000	-	-	-

H920 mm

Shelf depth mm	Item no. Starter bay	Melamine F14512	Painted F14513	Veneer F14514	Item no. Add-on bay	Melamine F14518	Painted F14519	Veneer F14520
30	F145xx23040000000	-	-	-	F145xx23040000000	-	-	-

H1220 mm

Shelf depth mm	Item no. Starter bay	Melamine F14512	Painted F14513	Veneer F14514	Item no. Add-on bay	Melamine F14518	Painted F14519	Veneer F14520
30	F145xx33040000000	-	-	-	F145xx33040000000	-	-	-

H1520 mm

Shelf depth mm	Item no. Starter bay	Melamine F14512	Painted F14513	Veneer F14514	Item no. Add-on bay	Melamine F14518	Painted F14519	Veneer F14520
30	F145xx43040000000	-	-	-	F145xx43040000000	-	-	-

H1820 mm

Shelf depth mm	Item no. Starter bay	Melamine F14512	Painted F14513	Veneer F14514	Item no. Add-on bay	Melamine F14518	Painted F14519	Veneer F14520
30	F145xx53040000000	-	-	-	F145xx53040000000	-	-	-

H2120 mm

Shelf depth mm	Item no. Starter bay	Melamine F14512	Painted F14513	Veneer F14514	Item no. Add-on bay	Melamine F14518	Painted F14519	Veneer F14520
30	F145xx63040000000	-	-	-	F145xx63040000000	-	-	-

LINGO ROUND SHELVING SYSTEM

18° - HIGH STEEL BACK PANEL - ADJUSTABLE FEET - FOR TOP SHELF

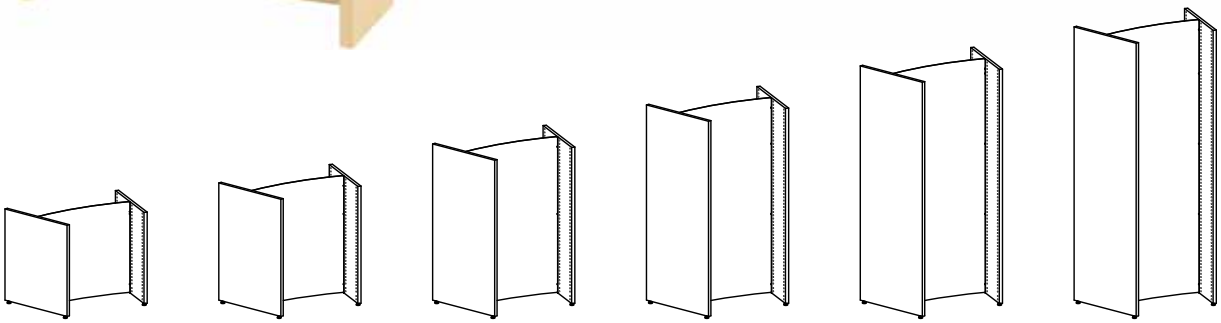

Double-sided starter bay - H720/920/1220/1520/1820/2120 mm

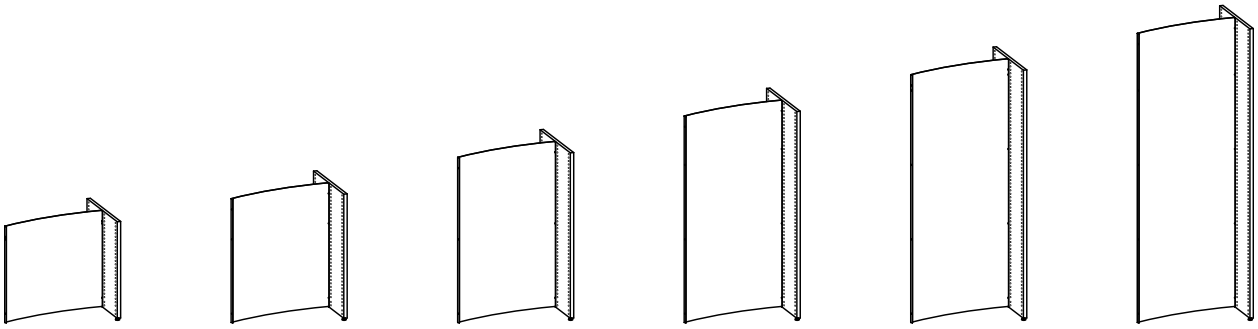

Double-sided add-on bay - H720/920/1220/1520/1820/2120 mm

LINGO ROUND SHELVING SYSTEM

18° - HIGH STEEL BACK PANEL - ADJUSTABLE FEET - FOR TOP SHELF
F14512/F14513/F14514/F14518/F14519/F14520

Round shelving system with wooden panels and high steel back panel.
To be used with WT5 single-sided standard depth top shelf.
Starter bay includes 2 wooden end panels and 1 steel back panel.
Add-on bay includes 1 intermediate wooden panel and 1 steel back panel.

- For top shelves, see pages 251-253.
- For shelves, see pages 259-281.
- For castor frame, see page 283.
- For end panel bay, see page 294.
Painted and veneered Lingo Shelving Systems are FSC-certified.

H720 mm

Shelf depth mm	Item no. Starter bay	Melamine F14512	Painted F14513	Veneer F14514	Item no. Add-on bay	Melamine F14518	Painted F14519	Veneer F14520
30	F145xx13090000000	-	-	-	F145xx13090000000	-	-	-

H920 mm

Shelf depth mm	Item no. Starter bay	Melamine F14512	Painted F14513	Veneer F14514	Item no. Add-on bay	Melamine F14518	Painted F14519	Veneer F14520
30	F145xx23090000000	-	-	-	F145xx23090000000	-	-	-

H1220 mm

Shelf depth mm	Item no. Starter bay	Melamine F14512	Painted F14513	Veneer F14514	Item no. Add-on bay	Melamine F14518	Painted F14519	Veneer F14520
30	F145xx33090000000	-	-	-	F145xx33090000000	-	-	-

H1520 mm

Shelf depth mm	Item no. Starter bay	Melamine F14512	Painted F14513	Veneer F14514	Item no. Add-on bay	Melamine F14518	Painted F14519	Veneer F14520
30	F145xx43090000000	-	-	-	F145xx43090000000	-	-	-

H1820 mm

Shelf depth mm	Item no. Starter bay	Melamine F14512	Painted F14513	Veneer F14514	Item no. Add-on bay	Melamine F14518	Painted F14519	Veneer F14520
30	F145xx53090000000	-	-	-	F145xx53090000000	-	-	-

H2120 mm

Shelf depth mm	Item no. Starter bay	Melamine F14512	Painted F14513	Veneer F14514	Item no. Add-on bay	Melamine F14518	Painted F14519	Veneer F14520
30	F145xx63090000000	-	-	-	F145xx63090000000	-	-	-

LINGO ROUND SHELVING SYSTEM

18° - LOW STEEL BACK PANEL - ADJUSTABLE FEET - FOR TOP SHELF

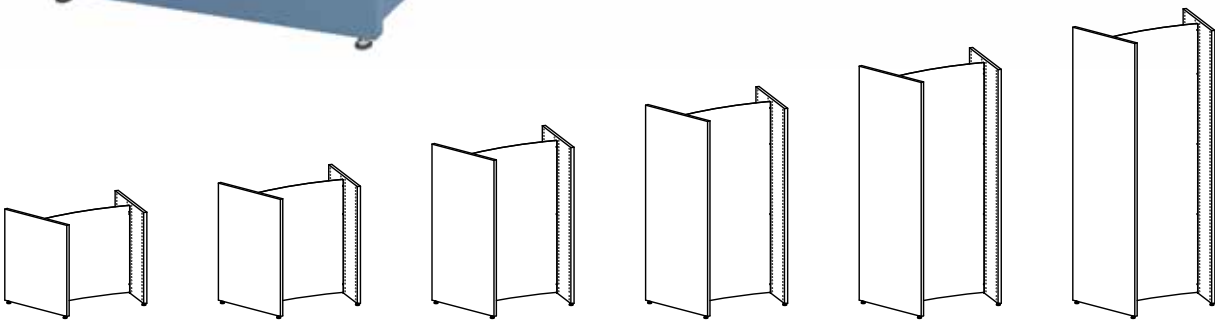

Double-sided freestanding bay - H720/920/1220/1520/1820/2120 mm

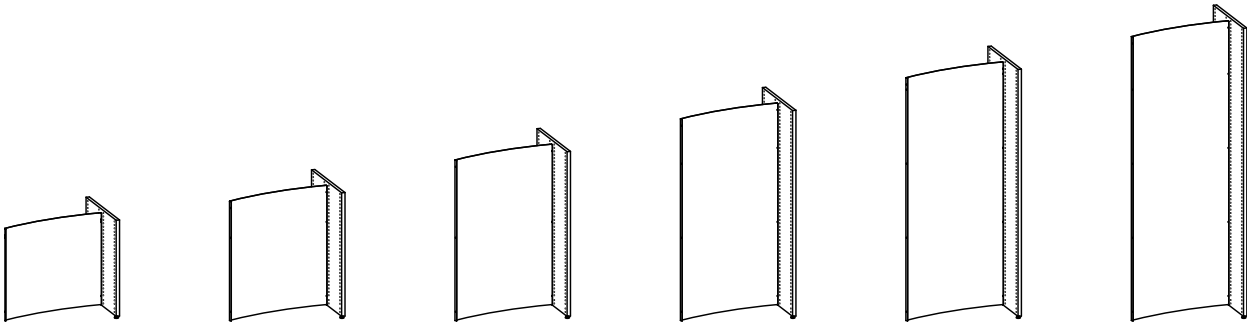

Double-sided intermediate bay - H720/920/1220/1520/1820/2120 mm

LINGO ROUND SHELVING SYSTEM

18° - LOW STEEL BACK PANEL - ADJUSTABLE FEET - FOR TOP SHELF
F14512/F14513/F14514/F14518/F14519/F14520

Round shelving system with wooden panels and low steel back panel.
To be used with WT7 double-sided top shelf.
Starter bay includes 2 end wooden panels and 1 steel back panel.
Add-on bay includes 1 intermediate wooden panel and 1 steel back panel.

- For top shelves, see pages 251-253.
- For shelves, see pages 259-281.
- For plinths, see page 283.

Painted and veneered Lingo Shelving Systems are FSC-certified.

H720 mm

Shelf depth mm	Item no. Starter bay	Melamine F14512	Painted F14513	Veneer F14514	Item no. Add-on bay	Melamine F14518	Painted F14519	Veneer F14520
30	F145xx13080000000	-	-	-	F145xx13080000000	-	-	-

H920 mm

Shelf depth mm	Item no. Starter bay	Melamine F14512	Painted F14513	Veneer F14514	Item no. Add-on bay	Melamine F14518	Painted F14519	Veneer F14520
30	F145xx23080000000	-	-	-	F145xx23080000000	-	-	-

H1220 mm

Shelf depth mm	Item no. Starter bay	Melamine F14512	Painted F14513	Veneer F14514	Item no. Add-on bay	Melamine F14518	Painted F14519	Veneer F14520
30	F145xx33080000000	-	-	-	F145xx33080000000	-	-	-

H1520 mm

Shelf depth mm	Item no. Starter bay	Melamine F14512	Painted F14513	Veneer F14514	Item no. Add-on bay	Melamine F14518	Painted F14519	Veneer F14520
30	F145xx43080000000	-	-	-	F145xx43080000000	-	-	-

H1820 mm

Shelf depth mm	Item no. Starter bay	Melamine F14512	Painted F14513	Veneer F14514	Item no. Add-on bay	Melamine F14518	Painted F14519	Veneer F14520
30	F145xx53080000000	-	-	-	F145xx53080000000	-	-	-

H2120 mm

Shelf depth mm	Item no. Starter bay	Melamine F14512	Painted F14513	Veneer F14514	Item no. Add-on bay	Melamine F14518	Painted F14519	Veneer F14520
30	F145xx63080000000	-	-	-	F145xx63080000000	-	-	-

LINGO ROUND SHELVING SYSTEM

18° - STEEL BACK FRAME - ADJUSTABLE FEET - FOR TOP PLATE

LINGO ROUND SHELVING SYSTEM

18° - STEEL BACK FRAME - ADJUSTABLE FEET - FOR TOP PLATE
F14612/F14613/F14614/F14615/F14616/F14617

Round shelving system with wooden panels and steel back frame.
To be used with WO5 overlaying top plate.
Starter bay includes 2 end wooden panels and 1 steel back frame.
Add-on bay includes 1 intermediate wooden panel and 1 steel back frame.

- For overlaying top plate, see pages 255-258.
- For shelves, see pages 259-281.
- For plinths, see page 283.
- For end panel bays, see page 294.
Painted and veneered Lingo Shelving Systems are FSC-certified.

H720 mm

Shelf depth mm	Item no. Starter bay	Melamine F14612	Painted F14613	Veneer F14614	Item no. Add-on bay	Melamine F14615	Painted F14616	Veneer F14617
30	F146xx13040000000	-	-	-	F146xx13040000000	-	-	-

H920 mm

Shelf depth mm	Item no. Starter bay	Melamine F14612	Painted F14613	Veneer F14614	Item no. Add-on bay	Melamine F14615	Painted F14616	Veneer F14617
30	F146xx23040000000	-	-	-	F146xx23040000000	-	-	-

H1220 mm

Shelf depth mm	Item no. Starter bay	Melamine F14612	Painted F14613	Veneer F14614	Item no. Add-on bay	Melamine F14615	Painted F14616	Veneer F14617
30	F146xx33040000000	-	-	-	F146xx33040000000	-	-	-

H1520 mm

Shelf depth mm	Item no. Starter bay	Melamine F14612	Painted F14613	Veneer F14614	Item no. Add-on bay	Melamine F14615	Painted F14616	Veneer F14617
30	F146xx43040000000	-	-	-	F146xx43040000000	-	-	-

H1820 mm

Shelf depth mm	Item no. Starter bay	Melamine F14612	Painted F14613	Veneer F14614	Item no. Add-on bay	Melamine F14615	Painted F14616	Veneer F14617
30	F146xx53040000000	-	-	-	F146xx53040000000	-	-	-

H2120 mm

Shelf depth mm	Item no. Starter bay	Melamine F14612	Painted F14613	Veneer F14614	Item no. Add-on bay	Melamine F14615	Painted F14616	Veneer F14617
30	F146xx63040000000	-	-	-	F146xx63040000000	-	-	-

LINGO ROUND SHELVING SYSTEM

18° - STEEL BACK PANEL - ADJUSTABLE FEET - FOR TOP PLATE

LINGO ROUND SHELVING SYSTEM

18° - STEEL BACK PANEL - ADJUSTABLE FEET - FOR TOP PLATE
F14612/F14613/F14614/F14615/F14616/F14617

Round shelving system with wooden end panels and steel back panel.
To be used with WO5 overlaying top plate.
Starter bay includes 2 wooden end panels and 1 steel back panel.
Add-on bay includes 1 intermediate wooden panel and 1 steel back panel.

- For overlaying top plate, see pages 255-258.
- For shelves, see pages 259-281.
- For castor frame, see page 283.

Painted and veneered Lingo Shelving Systems are FSC-certified.

H720 mm

Shelf depth mm	Item no. Starter bay	Melamine F14612	Painted F14613	Veneer F14614	Item no. Add-on bay	Melamine F14615	Painted F14616	Veneer F14617
30	F146xx13070000000	-	-	-	F146xx13070000000	-	-	-

H920 mm

Shelf depth mm	Item no. Starter bay	Melamine F14612	Painted F14613	Veneer F14614	Item no. Add-on bay	Melamine F14615	Painted F14616	Veneer F14617
30	F146xx23070000000	-	-	-	F146xx23070000000	-	-	-

H1220 mm

Shelf depth mm	Item no. Starter bay	Melamine F14612	Painted F14613	Veneer F14614	Item no. Add-on bay	Melamine F14615	Painted F14616	Veneer F14617
30	F146xx33070000000	-	-	-	F146xx33070000000	-	-	-

H1520 mm

Shelf depth mm	Item no. Starter bay	Melamine F14612	Painted F14613	Veneer F14614	Item no. Add-on bay	Melamine F14615	Painted F14616	Veneer F14617
30	F146xx43070000000	-	-	-	F146xx43070000000	-	-	-

H1820 mm

Shelf depth mm	Item no. Starter bay	Melamine F14612	Painted F14613	Veneer F14614	Item no. Add-on bay	Melamine F14615	Painted F14616	Veneer F14617
30	F146xx53070000000	-	-	-	F146xx53070000000	-	-	-

H2120 mm

Shelf depth mm	Item no. Starter bay	Melamine F14612	Painted F14613	Veneer F14614	Item no. Add-on bay	Melamine F14615	Painted F14616	Veneer F14617
30	F146xx63070000000	-	-	-	F146xx63070000000	-	-	-

LINGO ROUND SHELVING SYSTEM

18° - STEEL BACK FRAME - CASTOR PLATE - FOR TOP SHELF

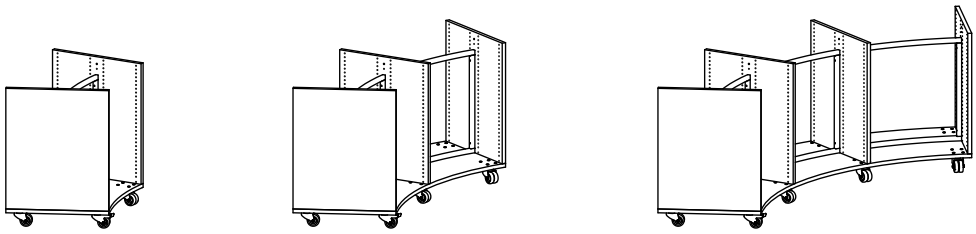

Double-sided H920 mm - 1/2/3 bays

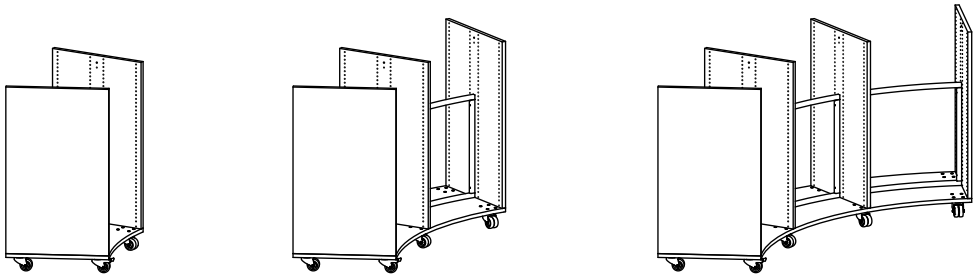

Double-sided H1220 mm - 1/2/3 bays

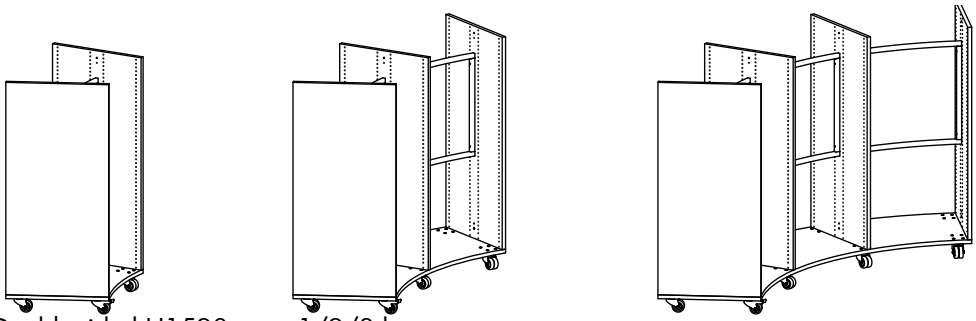

Double-sided H1520 mm - 1/2/3 bays

LINGO ROUND SHELVING SYSTEM

18° - STEEL BACK FRAME - CASTOR PLATE - FOR TOP SHELF
F14806/F14807/F14808

Round shelving system with wooden panels, steel back frame and castor plate.
To be used with WT5 single-sided and WT7 double-sided top shelf.

- For top shelves, see pages 251-253.
- For shelves, see pages 259-281.

Painted and veneered Lingo Shelving Systems are FSC-certified.

H920 mm

No. of bays	Item no.	Melamine F14806	Painted F14807	Veneer F14808
1	F148xx231040000000	-	-	-
2	F148xx232040000000	-	-	-
3	F148xx233040000000	-	-	-

H1220 mm

No. of bays	Item no.	Melamine F14806	Painted F14807	Veneer F14808
1	F148xx331040000000	-	-	-
2	F148xx332040000000	-	-	-
3	F148xx333040000000	-	-	-

H1520 mm

No. of bays	Item no.	Melamine F14806	Painted F14807	Veneer F14808
1	F148xx431040000000	-	-	-
2	F148xx432040000000	-	-	-
3	F148xx433040000000	-	-	-

LINGO ROUND SHELVING SYSTEM

18° - HIGH STEEL BACK PANEL - CASTOR PLATE - FOR TOP SHELF

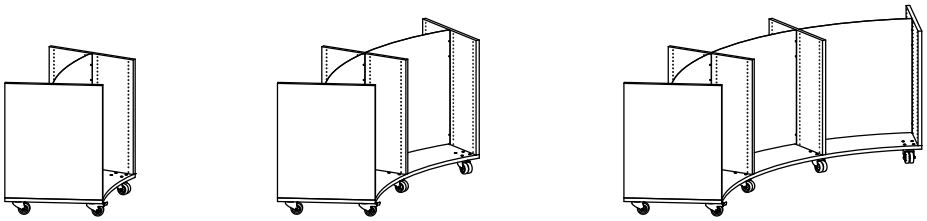

Double-sided H920 mm - 1/2/3 bays

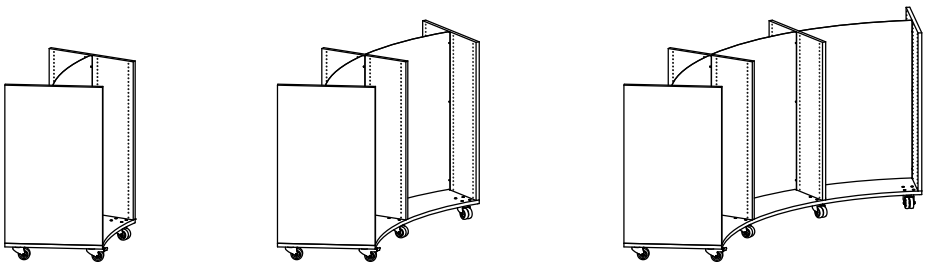

Double-sided H1220 mm - 1/2/3 bays

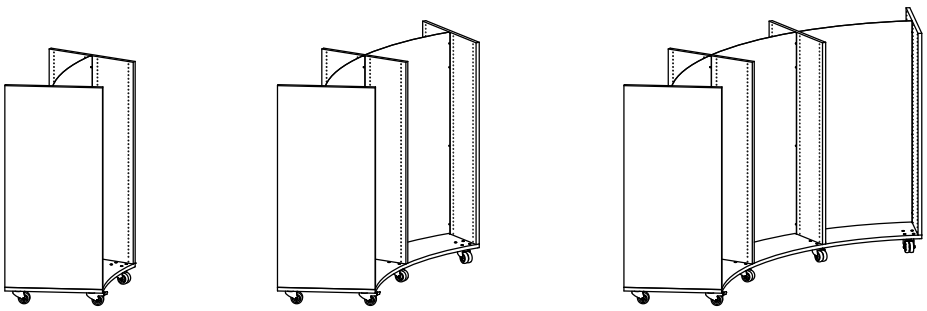

Double-sided H1520 mm - 1/2/3 bays

LINGO ROUND SHELVING SYSTEM

18° - HIGH STEEL BACK PANEL - CASTOR PLATE - FOR TOP SHELF
F14806/F14807/F14808

Round shelving system with wooden panels, high steel back panel and castor plate.
To be used with top shelves WT5 standard depth top shelf.

- For top shelves, see pages 251-253.
- For shelves, see pages 259-281.

Painted and veneered Lingo Shelving Systems are FSC-certified.

H920 mm

No. of bays	Item no.	Melamine F14806	Painted F14807	Veneer F14808
1	F148xx231090000000	-	-	-
2	F148xx232090000000	-	-	-
3	F148xx233090000000	-	-	-

H1220 mm

No. of bays	Item no.	Melamine F14806	Painted F14807	Veneer F14808
1	F148xx331090000000	-	-	-
2	F148xx332090000000	-	-	-
3	F148xx333090000000	-	-	-

H1520 mm

No. of bays	Item no.	Melamine F14806	Painted F14807	Veneer F14808
1	F148xx431090000000	-	-	-
2	F148xx432090000000	-	-	-
3	F148xx433090000000	-	-	-

LINGO ROUND SHELVING SYSTEM

18° - LOW STEEL BACK PANEL - CASTOR PLATE - FOR TOP SHELF

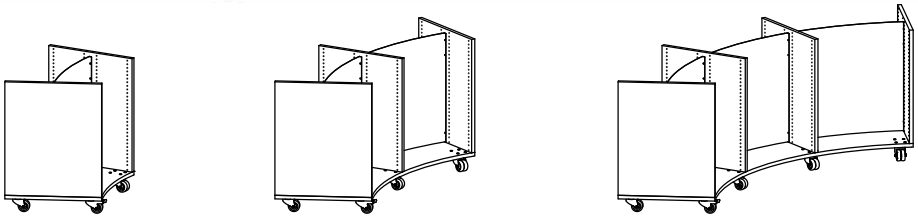

Double-sided H920 mm - 1/2/3 bays

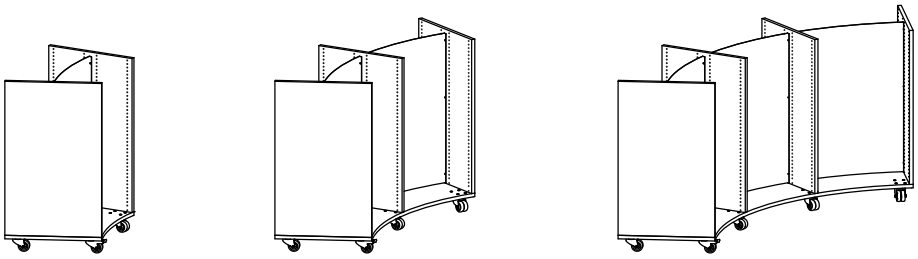

Double-sided H1220 mm - 1/2/3 bays

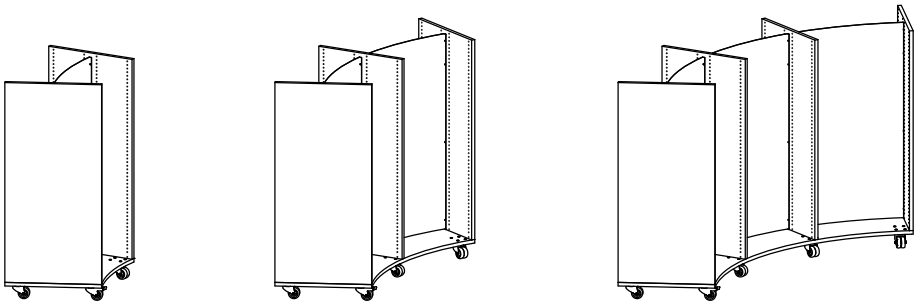

Double-sided H1520 mm - 1/2/3 bays

LINGO ROUND SHELVING SYSTEM

18° - LOW STEEL BACK PANEL - CASTOR PLATE - FOR TOP SHELF
F14806/F14807/F14808

Round shelving system with wooden panels, low steel back panel and castor plate.
To be used with top shelves WT7 double-sided top shelf.

- For top shelves, see pages 251-253.
- For shelves, see pages 259-281.
- For slat panels, see page 284-291 (note slate panel replaces outer panel).

Painted and veneered Lingo Shelving Systems are FSC-certified.

H920 mm

No. of bays	Item no.	Melamine F14806	Painted F14807	Veneer F14808
1	F148xx231080000000	-	-	-
2	F148xx232080000000	-	-	-
3	F148xx233080000000	-	-	-

H1220 mm

No. of bays	Item no.	Melamine F14806	Painted F14807	Veneer F14808
1	F148xx331080000000	-	-	-
2	F148xx332080000000	-	-	-
3	F148xx333080000000	-	-	-

H1520 mm

No. of bays	Item no.	Melamine F14806	Painted F14807	Veneer F14808
1	F148xx431080000000	-	-	-
2	F148xx432080000000	-	-	-
3	F148xx433080000000	-	-	-

LINGO ROUND SHELVING SYSTEM

18° - STEEL BACK FRAME - CASTOR PLATE - FOR OVERLAYING TOP PLATE

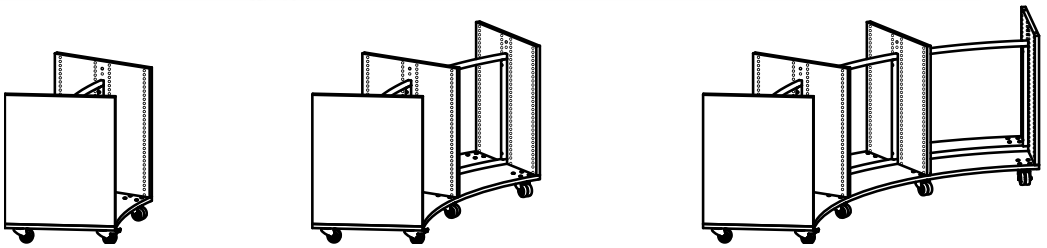

Double-sided H920 mm - 1/2/3 bays

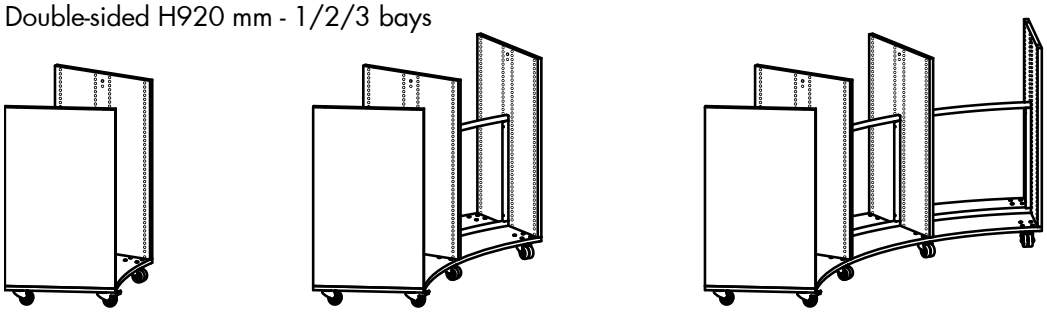

Double-sided H1220 mm - 1/2/3 bays

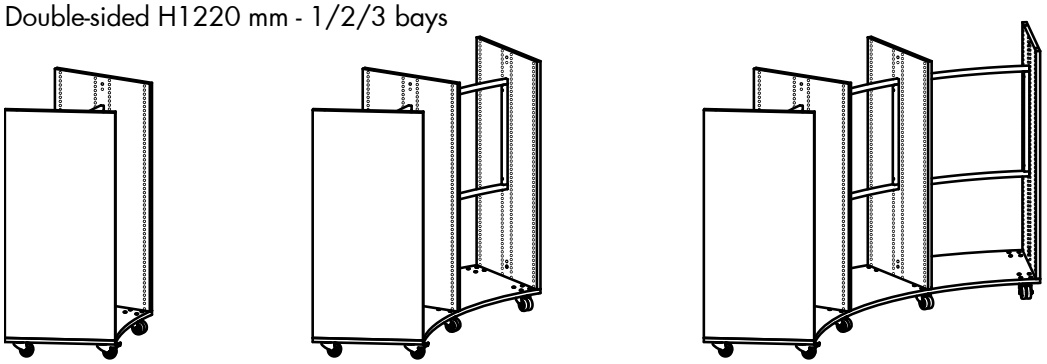

Double-sided H1520 mm - 1/2/3 bays

LINGO ROUND SHELVING SYSTEM

18° - STEEL BACK FRAME - CASTOR PLATE - FOR OVERLAYING TOP PLATE
F14906/F14907/F14908

Round shelving system with wooden panels, steel back frame and castor plate.
To be used with WO5 overlaying top plate.

- For overlaying top plate, see pages 255-258.
- For shelves, see pages 259-281.

Painted and veneered Lingo Shelving Systems are FSC-certified.

H920 mm

No. of bays	Item no.	Melamine F14906	Painted F14907	Veneer F14908
1	F149xx231040000000	-	-	-
2	F149xx232040000000	-	-	-
3	F149xx233040000000	-	-	-

H1220 mm

No. of bays	Item no.	Melamine F14906	Painted F14907	Veneer F14908
1	F149xx331040000000	-	-	-
2	F149xx332040000000	-	-	-
3	F149xx333040000000	-	-	-

H1520 mm

No. of bays	Item no.	Melamine F14906	Painted F14907	Veneer F14908
1	F149xx431040000000	-	-	-
2	F149xx432040000000	-	-	-
3	F149xx433040000000	-	-	-

LINGO ROUND SHELVING SYSTEM

18° - STEEL BACK PANEL - CASTOR PLATE - FOR OVERLAYING TOP PLATE

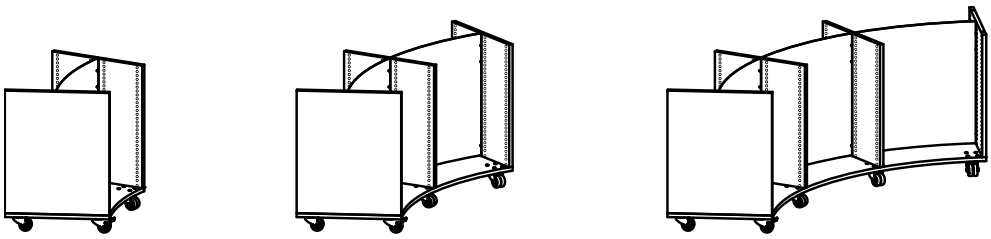

Double-sided H920 mm - 1/2/3 bays

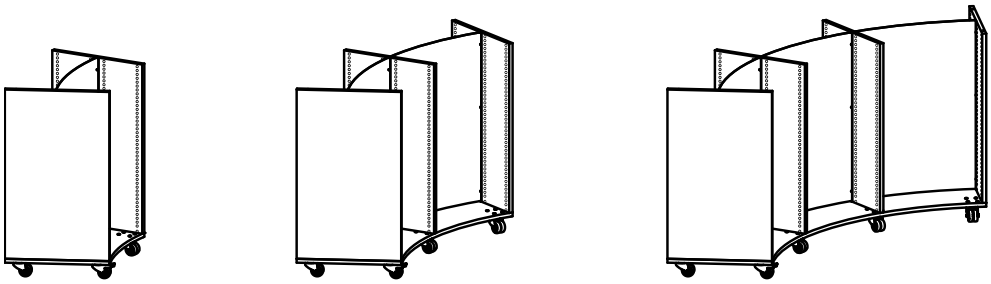

Double-sided H1220 mm - 1/2/3 bays

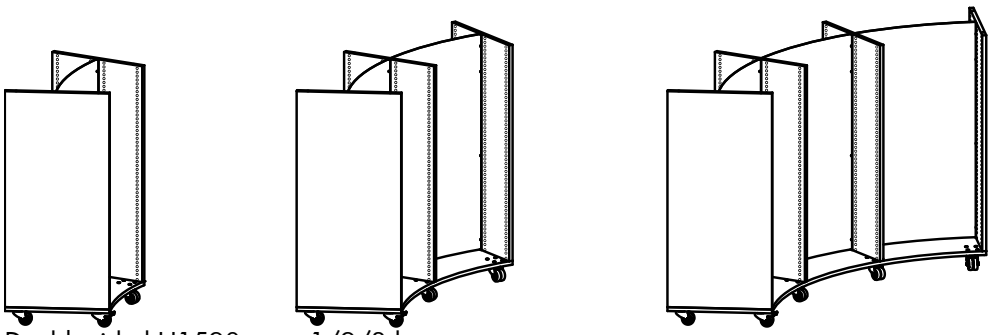

Double-sided H1520 mm - 1/2/3 bays

LINGO ROUND SHELVING SYSTEM

18° - STEEL BACK PANEL - CASTOR PLATE - FOR OVERLAYING TOP PLATE
F14906/F14907/F14908

Round shelving system with wooden panels, steel back panel and castor plate.
To be used with WO5 overlaying top plate.

- For overlaying top plate, see pages 255-258.
- For shelves, see pages 259-281.

Painted and veneered Lingo Shelving Systems are FSC-certified.

H920 mm

No. of bays	Item no.	Melamine F14906	Painted F14907	Veneer F14908
1	F149xx231070000000	-	-	-
2	F149xx232070000000	-	-	-
3	F149xx233070000000	-	-	-

H1220 mm

No. of bays	Item no.	Melamine F14906	Painted F14907	Veneer F14908
1	F149xx331070000000	-	-	-
2	F149xx332070000000	-	-	-
3	F149xx333070000000	-	-	-

H1520 mm

No. of bays	Item no.	Melamine F14906	Painted F14907	Veneer F14908
1	F149xx431070000000	-	-	-
2	F149xx432070000000	-	-	-
3	F149xx433070000000	-	-	-

Life
A SMILE
IN THE
MIND
zen

WT5 - SINGLE-SIDED 26°/18° WOODEN TOP SHELF

Details:
- 26°/18°
- Melamine/painted/veneer
- Single-sided standard depth inner & outer
- Snapfix and screws
- Max. weight 25 kg
- Chipboard

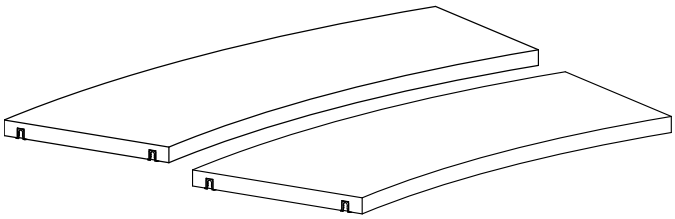

Use with:
- Sx5/Sx6 - 26°/18° steel shelves
- W5/W6/W7/W8 - 26°/18° wooden shelves
- WP1/WP5 - wooden panel
- SBP5/SBP7 - 26°/18° steel back panel for standard depth

Note:
- Wooden top shelves must always be fixed with snapfix and screws.

WT7 - DOUBLE-SIDED 26°/18° WOODEN TOP SHELF

Details:
- 26°/18°
- Melamine/painted/veneer
- Double-sided
- Snapfix and screws
- Max. weight 25 kg.
- Chipboard

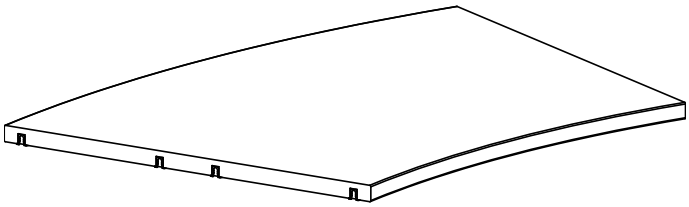

Use with:
- Sx5/Sx6 - 26°/18° steel shelves
- W5/W5/W7/W8 - 26°/18° wooden shelves
- WP1/WP5 - wooden panel
- SBP6/SBP8 - 26°/18° steel back panel for double-sided

Note:
- Wooden top shelves must always be fixed with snapfix and screws.

SHELVES

WT5/WT7 - 26° WOODEN TOP SHELF

Painted and veneered shelves are FSC-certified.

WT5 - single-sided 26° wooden top shelf - standard depth - inner

Chipboard. With snapfix and screws.	Degree	Shelf depth mm	Item no.	Melamine S14490	Painted S14491	Veneer S14492
	26	300	S144xx31	-	-	-

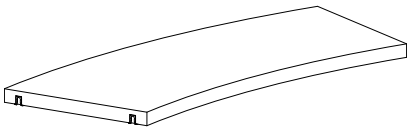

WT5 - single-sided 26° wooden top shelf - standard depth outer

Chipboard. With snapfix and screws.	Degree	Shelf depth mm	Item no.	Melamine S14490	Painted S14491	Veneer S14492
	26	300	S144xx32	-	-	-

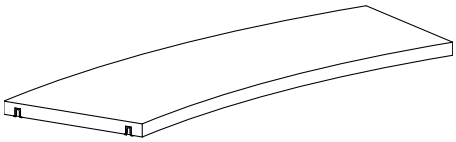

WT7 - double-sided 26° wooden top shelf

Chipboard. With snapfix and screws.	Degree	Shelf depth mm	Item no.	Melamine S14502	Painted S14503	Veneer S14504
	26	300	S145xx3	-	-	-

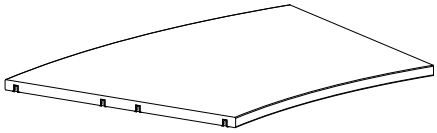

WT5 - single-sided 18° wooden top shelf - standard depth - inner

Chipboard. With snapfix and screws.	Degree	Shelf depth mm	Item no.	Melamine S14496	Painted S14497	Veneer S14498
	18	300	S144xx31	-	-	-

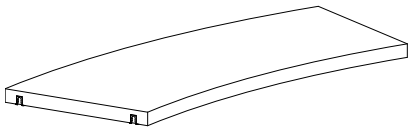

WT5 - single-sided 18° wooden top shelf - standard depth - outer

Chipboard. With snapfix and screws.	Degree	Shelf depth mm	Item no.	Melamine S14496	Painted S14497	Veneer S14498
	18	300	S144xx32	-	-	-

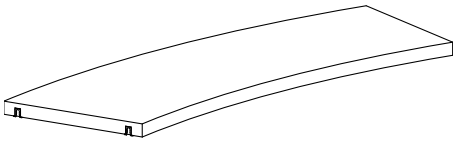

WT7 - double-sided 18° wooden top shelf

Chipboard. With snapfix and screws.	Degree	Shelf depth mm	Item no.	Melamine S14508	Painted S14509	Veneer S14510
	18	300	S145xx3	-	-	-

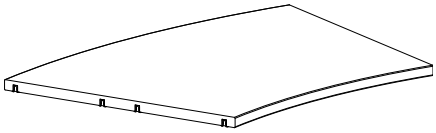

Skohylla
Funkis
SKOGRÄNS
SKOGRÄNS

WO5 - 26°/18° WOODEN OVERLAYING TOP PLATE

Details:
- Melamine/painted/veneer
- Freestanding/outer/intermediate
- Max. weight 25 kg.
- Chipboard

Use with:
- SI5 - 26°/18° steel shelves
- W5/W6/W7/W8 - 26°/18° wooden shelves
- WP3/WP7 - wooden panel
- SBP5/7 - 26°/18° steel back panel

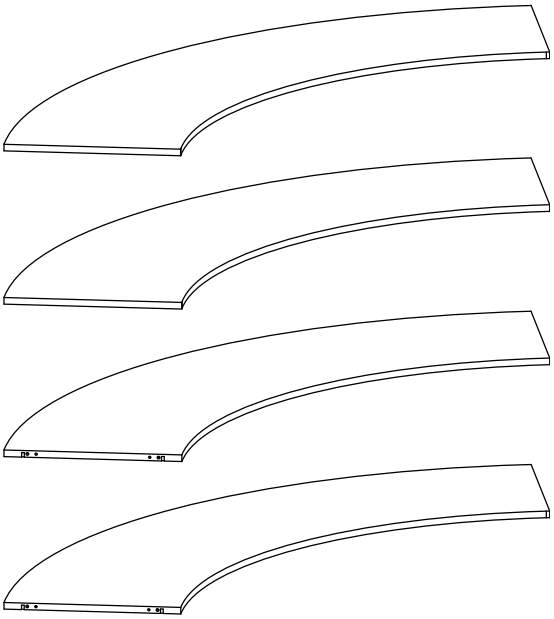

SHELVES

WO5 DOUBLE-SIDED 26° WOODEN OVERLAYING TOP PLATE

Painted and veneered shelves are FSC-certified.

WO5 - double-sided 26° wooden overlaying top plate - freestanding

Chipboard. Incl. fittings.	Degree	Shelf depth mm	No. of bays	Item no.	Melamine S14406	Painted S14407	Veneer S14408
	26	300	1	S144xx3261	-	-	-
	26	300	2	S144xx3262	-	-	-
	26	300	3	S144xx3263	-	-	-

WO5 - double-sided 26° wooden overlaying top plate - left outer

Chipboard. Incl. fittings.	Degree	Shelf depth mm	No. of bays	Item no.	Melamine S14406	Painted S14407	Veneer S14408
	26	300	1	S144xx3211	-	-	-
	26	300	2	S144xx3212	-	-	-
	26	300	3	S144xx3213	-	-	-

WO5 - double-sided 26° wooden overlaying top plate - intermediate

Chipboard. Incl. fittings.	Degree	Shelf depth mm	No. of bays	Item no.	Melamine S14406	Painted S14407	Veneer S14408
	26	300	1	S144xx3231	-	-	-
	26	300	2	S144xx3232	-	-	-
	26	300	3	S144xx3233	-	-	-

WO5 - double-sided 26° wooden overlaying top plate - right outer

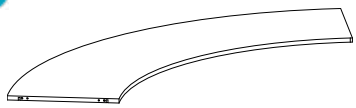

Chipboard. Incl. fittings.	Degree	Shelf depth mm	No. of bays	Item no.	Melamine S14406	Painted S14407	Veneer S14408
	26	300	1	S144xx3221	-	-	-
	26	300	2	S144xx3222	-	-	-
	26	300	3	S144xx3223	-	-	-

Painted and veneered shelves are FSC-certified.

WO5 - double-sided 18° wooden overlaying top plate - freestanding

Chipboard. Incl. fittings.	Degree	Shelf depth mm	No. of bays	Item no.	Melamine S14409	Painted S14410	Veneer S14411
	18	300	1	S144xx3261	-	-	-
	18	300	2	S144xx3262	-	-	-
	18	300	3	S144xx3263	-	-	-

WO5 - double-sided 18° wooden overlaying top plate - left outer

Chipboard. Incl. fittings.	Degree	Shelf depth mm	No. of bays	Item no.	Melamine S14409	Painted S14410	Veneer S14411
	18	300	1	S144xx3211	-	-	-
	18	300	2	S144xx3212	-	-	-
	18	300	3	S144xx3213	-	-	-

WO5 - double-sided 18° wooden overlaying top plate - intermediate

Chipboard. Incl. fittings.	Degree	Shelf depth mm	No. of bays	Item no.	Melamine S14409	Painted S14410	Veneer S14411
	18	300	1	S144xx3231	-	-	-
	18	300	2	S144xx3232	-	-	-
	18	300	3	S144xx3233	-	-	-

WO5 - double-sided 18° wooden overlaying top plate - right outer

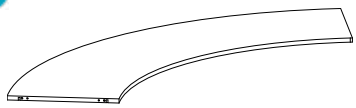

Chipboard. Incl. fittings.	Degree	Shelf depth mm	No. of bays	Item no.	Melamine S14409	Painted S14410	Veneer S14411
	18	300	1	S144xx3221	-	-	-
	18	300	2	S144xx3222	-	-	-
	18	300	3	S144xx3223	-	-	-

E

SI5 - SINGLE-SIDED 26°/18° STEEL INTERMEDIATE SHELF WITH STEEL BACKEDGE

Details:
- 26°/18°
- Inner & outer
- Steel backedge H47 mm
- Steel brackets
- Max. weight 80 kg.

Use with:
- WT5/WT7 - wooden top shelf
- WO5 - wooden overlaying top plate

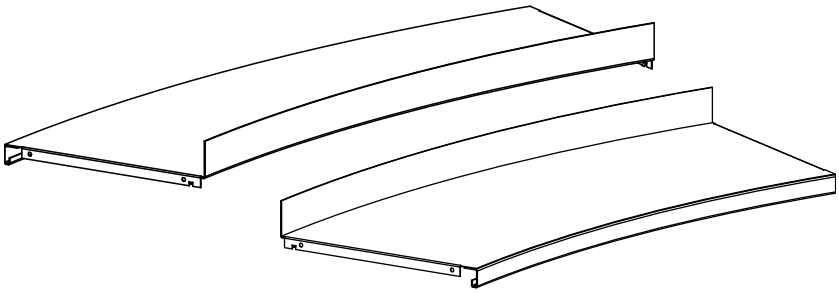

SI6 - SINGLE-SIDED 26°/18° STEEL INTERMEDIATE SHELF

Details:
- 26°/18°
- Inner & outer
- Steel brackets
- Max. weight 80 kg.

Use with:
- WT5/WT7 - wooden top shelf
- WO5 - wooden overlaying top plate

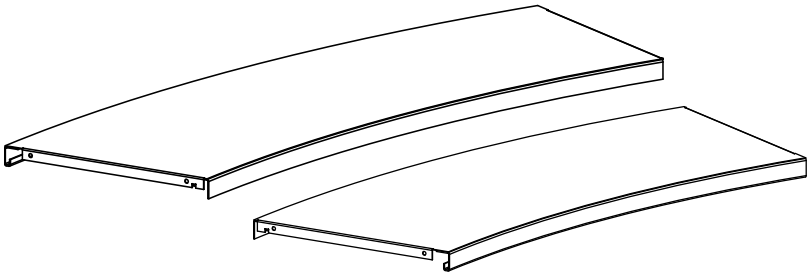

SHELVES

SI5 - SINGLE-SIDED 26°/18° STEEL INTERMEDIATE SHELF WITH STEEL BACKEDGE - INNER

SI5 - single-sided 26°/18° intermediate steel shelf with steel backedge and steel brackets - inner

Steel backedge 47 mm.
With brackets and fittings.

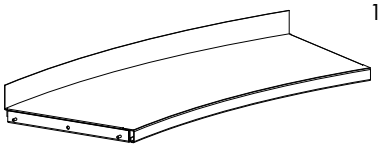

Degree	Shelf depth mm	Item no.	
26	300	F14440311	-
18	300	F14441311	-

SI5 - single-sided 26°/18° intermediate steel shelf with steel backedge - inner

Steel backedge 47 mm.
Brackets to be ordered separately, see below.

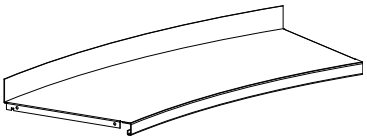

Degree	Shelf depth mm	Item no.	
26	300	S14350311	-
18	300	S14351311	-

Steel bracket - for SI5 & SI6

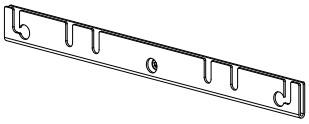

Shelf depth mm	Item no.	
300	S147203	-

SI5 - SINGLE-SIDED 26°/18° STEEL INTERMEDIATE SHELF WITH STEEL BACKEDGE - OUTER

SI5 - single-sided 26°/18° intermediate steel shelf with steel backedge and steel brackets - outer

Steel backedge 47 mm.
With brackets, fittings and shelf strengthner.

Degree	Shelf depth mm	Item no.	
26	300	F14440312	-
18	300	F14441312	-

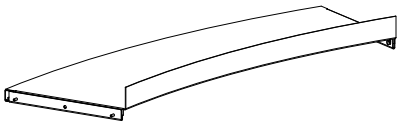

SI5 - single-sided 26°/18° intermediate steel shelf with steel backedge - outer

Steel backedge 47 mm.
With shelf strengthner.
Brackets to be ordered separately, see below.

Degree	Shelf depth mm	Item no.	
26	300	S14350312	-
18	300	S14351312	-

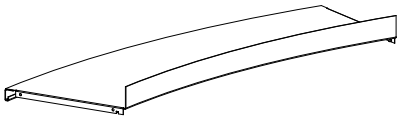

Steel bracket - for SI5 & SI6

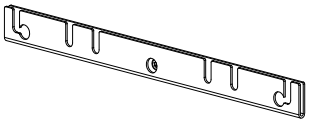

Shelf depth mm	Item no.	
300	S147203	-

SHELVES

SI6 - SINGLE-SIDED 26°/18° STEEL INTERMEDIATE SHELF - INNER

SI6 - single-sided 26°/18° intermediate steel shelf with steel brackets - inner

With brackets and fittings.

Degree	Shelf depth mm	Item no.	
26	300	F14442311	-
18	300	F14443311	-

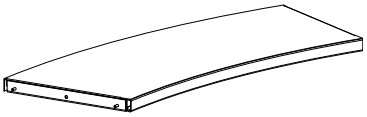

SI6 - single-sided 26°/18° intermediate steel shelf - inner

Brackets to be ordered separately, see below.

Degree	Shelf depth mm	Item no.	
26	300	S14352311	-
18	300	S14353311	-

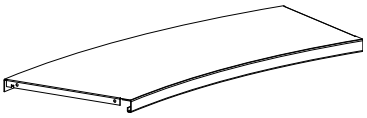

Steel bracket - for SI5 & SI6

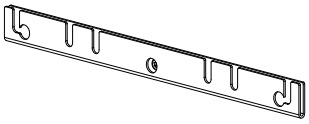

Shelf depth mm	Item no.	
300	S147203	-

SI6 - single-sided 26°/18° intermediate steel shelf with steel brackets - outer

With brackets, fittings and shelf strengthner.

Degree	Shelf depth mm	Item no.	
26	300	F14442312	-
18	300	F14443312	-

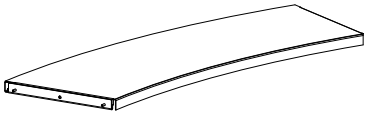

SI6 - single-sided 26°/18° intermediate steel shelf - outer

With shelf strengthner. Brackets to be ordered separately, see below.

Degree	Shelf depth mm	Item no.	
26	300	S14352312	-
18	300	S14353312	-

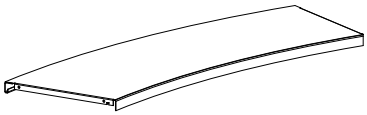

Steel bracket - for SI5 & SI6

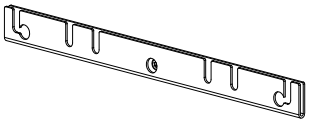

Shelf depth mm	Item no.	
300	S147203	-

SHELVES

WI5/WI6 - 26°/18° WOODEN INTERMEDIATE SHELVES - PAINTED/VENEER

See below for overview of standard 26°/18° wooden shelves:

WI5 - 26°/18° WOODEN INTERMEDIATE SHELF WITH H47 MM STEEL BACKEDGE

Details:
- 26°/18°
- Painted/veneer
- Steel backedge H47 mm
- Snapfix/snapfix and screws
- Max. weight 80 kg.
- Blockboard

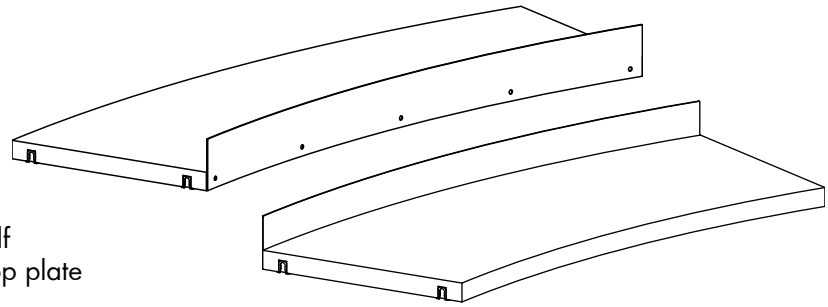

Use with:
- WT5/WT7 - 26°/18° wooden top shelf
- WO5 - 26°/18° wooden overlaying top plate

WI6 - 26°/18° WOODEN INTERMEDIATE SHELF

Details:
- 26°/18°
- Painted/veneer
- Snapfix/snapfix and screws
- Max. weight 80 kg.
- Blockboard

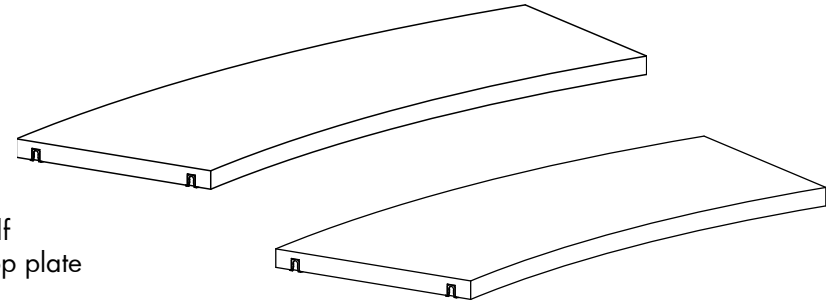

Use with:
- WT5/WT7 - 26°/18° wooden top shelf
- WO5 - 26°/18° wooden overlaying top plate

WI7/WI8 - 26°/18° WOODEN INTERMEDIATE SHELVES - MELAMINE

See below for overview of standard 26°/18° wooden shelves:

WI7 - 26°/18° WOODEN INTERMEDIATE SHELF WITH H47 MM STEEL BACKEDGE

Details:
- 26°/18°
- Melamine
- Steel backedge H47 mm
- Snapfix/snapfix and screws
- Max. weight 60 kg.
- Chipboard

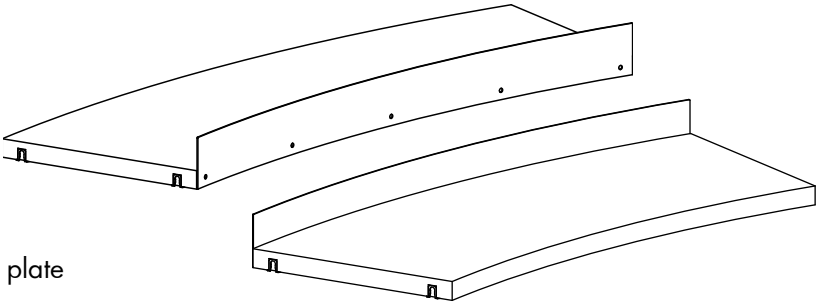

Use with:
- WT5/WT7 - 26°/18° wooden top shelf
- WO5 - 26°/18° wooden overlaying top plate

WI8 - 26°/18° WOODEN INTERMEDIATE SHELF

Details:
- 26°/18°
- Melamine
- Snapfix/snapfix and screws
- Max. weight 60 kg.
- Chipboard

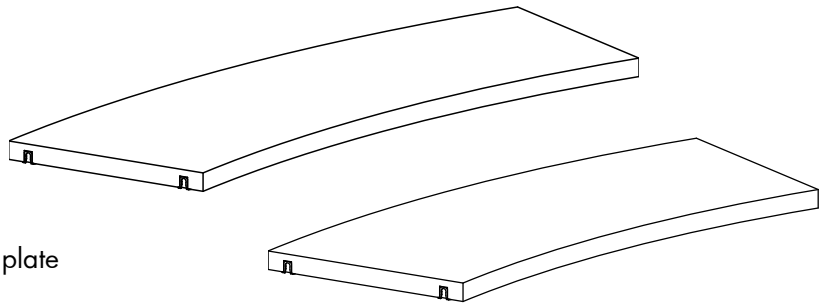

Use with:
- WT5/WT7 - 26°/18° wooden top shelf
- WO5 - 26°/18° wooden overlaying top plate

SHELVES

WI5/WI7 - 26° WOODEN INTERMEDIATE SHELF WITH BACKEDGE - INNER & OUTER

Painted and veneered shelves are FSC-certified.

WI5/WI7 - 26° wooden intermediate shelf with steel backedge and snapfix - inner

H47 mm steel backedge. With snapfix.	Degree	Shelf depth mm	Item no.	Melamine S14616	Painted S14600	Veneer S14601
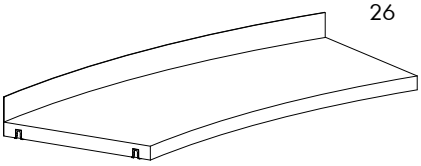	26	300	S146xx311	-	-	-

WI5/WI7 - 26° wooden intermediate shelf with steel backedge and snapfix - outer

H47 mm steel backedge. With snapfix.	Degree	Shelf depth mm	Item no.	Melamine S14616	Painted S14600	Veneer S14601
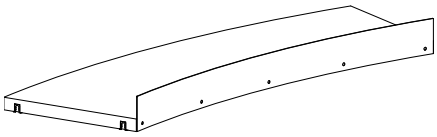	26	300	S146xx312	-	-	-

WI5/WI7 - 26° wooden intermediate shelf with steel backedge, snapfix and screws - inner

H47 mm steel backedge. With snapfix and screws.	Degree	Shelf depth mm	Item no.	Melamine S14618	Painted S14604	Veneer S14605
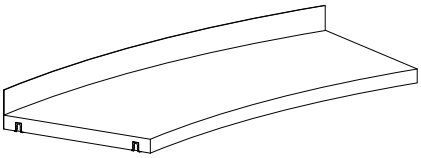	26	300	S146xx311	-	-	-

WI5/WI7 - 26° wooden intermediate shelf with steel backedge, snapfix and screws - outer

H47 mm steel backedge. With snapfix and screws.	Degree	Shelf depth mm	Item no.	Melamine S14618	Painted S14604	Veneer S14605
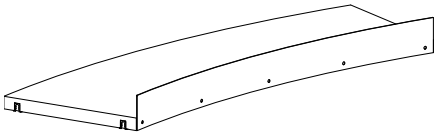	26	300	S146xx312	-	-	-

Painted and veneered shelves are FSC-certified.

WI6/WI8 - 26° wooden intermediate shelf without backedge, with snapfix - inner

With snapfix.

Degree	Shelf depth mm	Item no.	Melamine S14620	Painted S14608	Veneer S14609
26	300	S146xx311	-	-	-

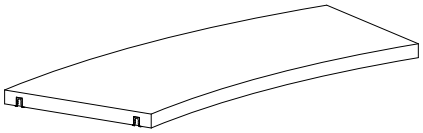

WI6/WI8 - 26° wooden intermediate shelf without backedge, with snapfix - outer

With snapfix.

Degree	Shelf depth mm	Item no.	Melamine S14620	Painted S14608	Veneer S14609
26	300	S146xx312	-	-	-

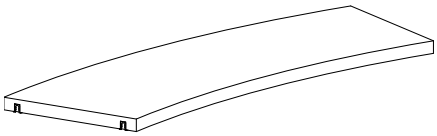

WI6/WI8 - 26° wooden intermediate shelf without backedge, with snapfix and screws - inner

With snapfix and screws.

Degree	Shelf depth mm	Item no.	Melamine S14622	Painted S14612	Veneer S14613
26	300	S146xx311	-	-	-

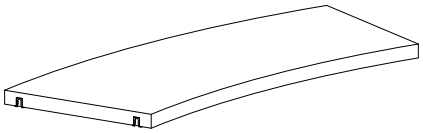

WI6/WI8 - 26° wooden intermediate shelf without backedge, with snapfix and screws - outer

With snapfix and screws.

Degree	Shelf depth mm	Item no.	Melamine S14622	Painted S14612	Veneer S14613
26	300	S146xx312	-	-	-

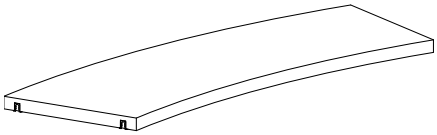

SHELVES

WI5/WI7 - 18° WOODEN SHELF WITH BACKEDGE - INNER & OUTER

Painted and veneered shelves are FSC-certified.

WI5/WI7 - 18° wooden intermediate shelf with steel backedge and snapfix - inner

H47 mm steel backedge. With snapfix.	Degree	Shelf depth mm	Item no.	Melamine S14617	Painted S14602	Veneer S14603
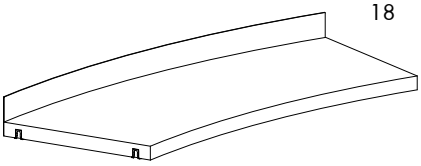	18	300	S146xx311	-	-	-

WI5/WI7 - 18° wooden intermediate shelf with steel backedge and snapfix - outer

H47 mm steel backedge. With snapfix.	Degree	Shelf depth mm	Item no.	Melamine S14617	Painted S14602	Veneer S14603
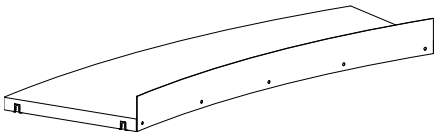	18	300	S146xx312	-	-	-

WI5/WI7 - 18° wooden intermediate shelf with steel backedge, snapfix and screws - inner

H47 mm steel backedge. With snapfix and screws.	Degree	Shelf depth mm	Item no.	Melamine S14619	Painted S14606	Veneer S14607
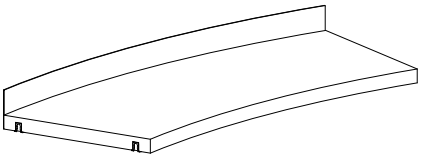	18	300	S146xx311	-	-	-

WI5/WI7 - 18° wooden intermediate shelf with steel backedge, snapfix and screws - outer

H47 mm steel backedge. With snapfix and screws.	Degree	Shelf depth mm	Item no.	Melamine S14619	Painted S14606	Veneer S14607
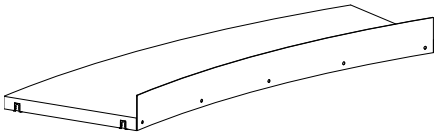	18	300	S146xx312	-	-	-

WI6/WI8 - 18° WOODEN INTERMEDIATE SHELF - INNER & OUTER

Painted and veneered shelves are FSC-certified.

WI6/WI8 - 18° wooden intermediate shelf without backedge, with snapfix - inner

With snapfix.

Degree	Shelf depth mm	Item no.	Melamine S14621	Painted S14610	Veneer S14611
18	300	S146xx311	-	-	-

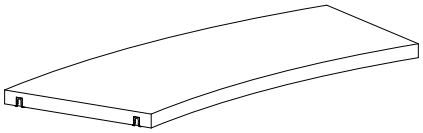

WI6/WI8 - 18° wooden intermediate shelf without backedge, with snapfix - outer

With snapfix.

Degree	Shelf depth mm	Item no.	Melamine S14621	Painted S14610	Veneer S14611
18	300	S146xx312	-	-	-

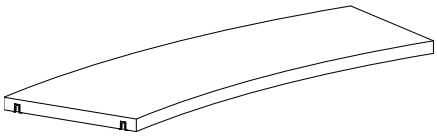

WI6/WI8 - 18° wooden intermediate shelf without backedge, with snapfix and screws - inner

With snapfix and screws.

Degree	Shelf depth mm	Item no.	Melamine S14623	Painted S14614	Veneer S14615
18	300	S146xx311	-	-	-

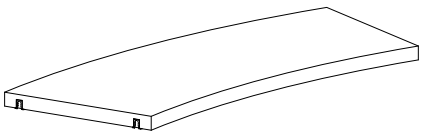

WI6/WI8 - 18° wooden intermediate shelf without backedge, with snapfix and screws - outer

With snapfix and screws.

Degree	Shelf depth mm	Item no.	Melamine S14623	Painted S14614	Veneer S14615
18	300	S146xx312	-	-	-

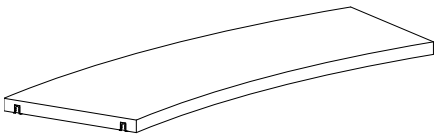

SB5 - SINGLE-SIDED 26°/18° STEEL BOTTOM SHELF WITH STEEL BACKEDGE

Details:
- 26°/18°
- Inner & outer
- Depth 300 mm
- Steel backedge H47 mm
- Steel brackets
- Max. weight 80 kg.

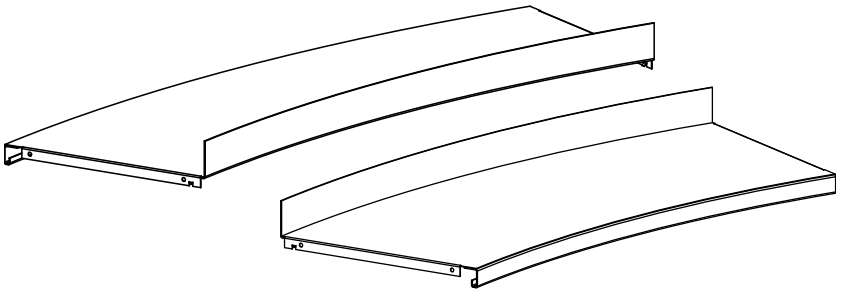

Use with:
- WT5 - wooden top shelf
- WO5 - wooden overlaying top plate

Note:
- Steel shelves placed at the bottom, must always be fixed with screws.

SB6 - SINGLE-SIDED 26°/18° STEEL BOTTOM SHELF

Details:
- 26°/18°
- Inner & outer
- Depth 300 mm
- Steel brackets
- Max. weight 80 kg.

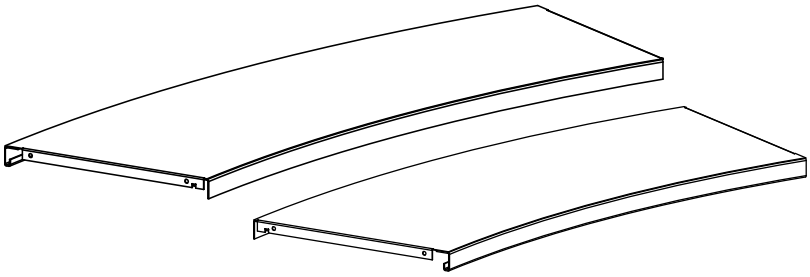

Use with:
- WT5 - wooden top shelf
- WO5 - wooden overlaying top plate

Note:
- Steel shelves placed at the bottom, must always be fixed with screws.

SHELVES

SB5 - SINGLE-SIDED 26°/18° STEEL BOTTOM SHELF WITH STEEL BACKEDGE - INNER

SB5 - single-sided, round, intermediate steel shelf with steel backedge and steel brackets - inner

Steel backedge 47 mm.
With brackets and fittings.

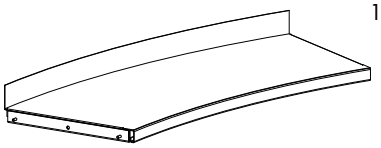

Degree	Shelf depth mm	Item no.	
26	300	F14460311	-
18	300	F14461311	-

SB5 - single-sided, round, intermediate steel shelf with steel backedge - inner

Steel backedge 47 mm.
Brackets to be ordered separately, see below.

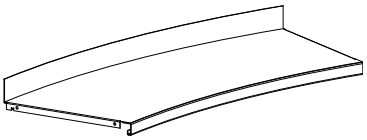

Degree	Shelf depth mm	Item no.	
26	300	S14375311	-
18	300	S14376311	-

Steel bracket - for SB5 & SI6

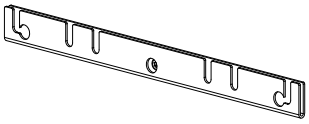

Shelf depth mm	Item no.	
300	S147203	-

SB5 - SINGLE-SIDED 26°/18° STEEL BOTTOM SHELF WITH STEEL BACKEDGE - OUTER

SB5 - single-sided, round, intermediate steel shelf with steel backedge and steel brackets - outer

Steel backedge 47 mm.
With brackets, fittings and shelf strengthner.

Degree	Shelf depth mm	Item no.	
26	300	F14460312	-
18	300	F14461312	-

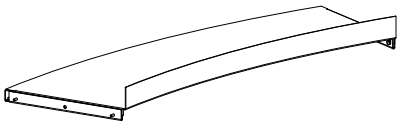

SB5 - single-sided, round, intermediate steel shelf with steel backedge - outer

Steel backedge 47 mm.
With shelf strengthner.
Brackets to be ordered separately, see below.

Degree	Shelf depth mm	Item no.	
26	300	S14375312	-
18	300	S14376312	-

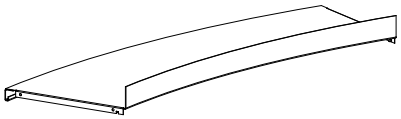

Steel bracket - for SB5 & SI6

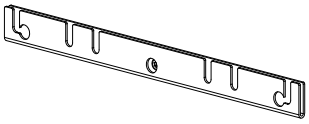

Shelf depth mm	Item no.	
300	S147203	-

SHELVES

SB6 - SINGLE-SIDED 26°/18° STEEL BOTTOM SHELF - INNER

SB6 - single-sided, 26°/18°, intermediate steel shelf with steel brackets - inner

With brackets and fittings.

Degree	Shelf depth mm	Item no.	
26	300	F14462311	-
18	300	F14463311	-

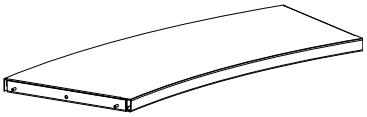

SB6 - single-sided, 26°/18°, intermediate steel shelf - inner

Brackets to be ordered separately, see below.

Degree	Shelf depth mm	Item no.	
26	300	S14377311	-
18	300	S14378311	-

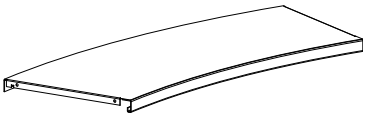

Steel bracket - for SB5 & SB6

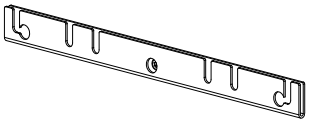

Shelf depth mm	Item no.	
300	S147203	-

SB6 - single-sided, 26°/18°, intermediate steel shelf with steel brackets - outer

With brackets, fittings and shelf strengthner.

Degree	Shelf depth mm	Item no.	
26	300	F14462312	-
18	300	F14463312	-

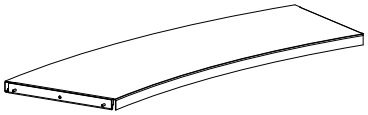

SB6 - single-sided, 26°/18°, intermediate steel shelf - outer

With shelf strengthner. Brackets to be ordered separately, see below.

Degree	Shelf depth mm	Item no.	
26	300	S14377312	-
18	300	S14378312	-

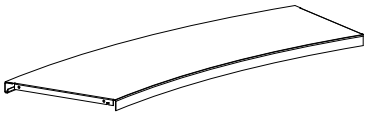

Steel bracket - for SB5 & SB6

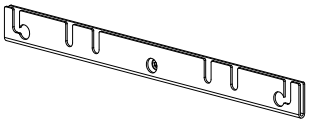

Shelf depth mm	Item no.	
300	S147203	-

SHELVES

WB5/WB6 - 26°/18° WOODEN BOTTOM SHELVES - PAINTED/VENEER

WB5 - 26°/18° WOODEN BOTTOM SHELF WITH H47 MM STEEL BACKEDGE

Details:
- 26°/18°
- Depth 300 mm
- Painted/veneer
- Steel backedge H47 mm
- Snapfix and screws
- Max. weight 80 kg.
- Blockboard

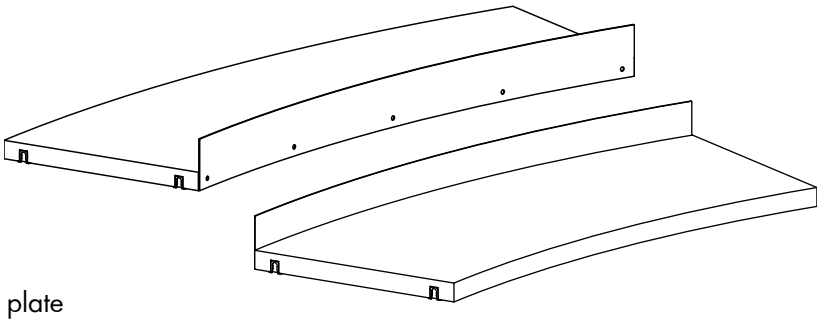

Use with:
- WT5 - 26°/18° wooden top shelf
- WO5 - 26°/18° wooden overlaying top plate

Note:
- Wooden shelves placed at the bottom, must always be fixed with snapfix and screws.

WB6 - 26°/18° WOODEN BOTTOM SHELF

Details:
- 26°/18°
- Depth 300 mm
- Painted/veneer
- Snapfix and screws
- Max. weight 80 kg.
- Blockboard

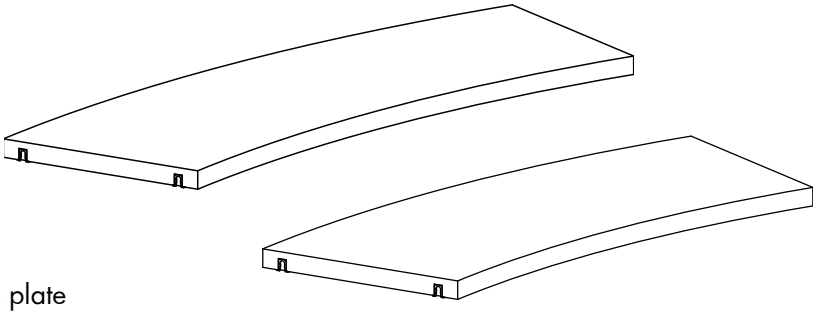

Use with:
- WT5 - 26°/18° wooden top shelf
- WO5 - 26°/18° wooden overlaying top plate

Note:
- Wooden shelves placed at the bottom, must always be fixed with snapfix and screws.

WB7 - 26°/18° WOODEN BOTTOM SHELF WITH H47 MM STEEL BACKEDGE

Details:
- 26°/18°
- Depth 300 mm
- Melamine
- Steel backedge H47 mm
- Snapfix and screws
- Max. weight 60 kg.
- Chipboard

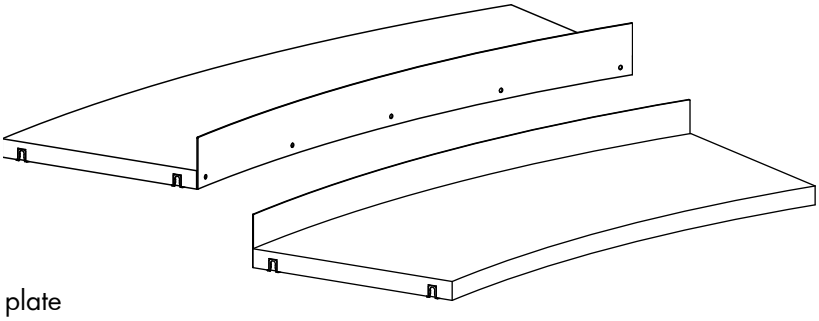

Use with:
- WT7 - 26°/18° wooden top shelf
- WO5 - 26°/18° wooden overlaying top plate

Note:
- Wooden shelves placed at the bottom, must always be fixed with snapfix and screws.

WB8 - 26°/18° WOODEN BOTTOM SHELF

Details:
- 26°/18°
- Depth 300 mm
- Melamine
- Snapfix and screws
- Max. weight 60 kg.
- Chipboard

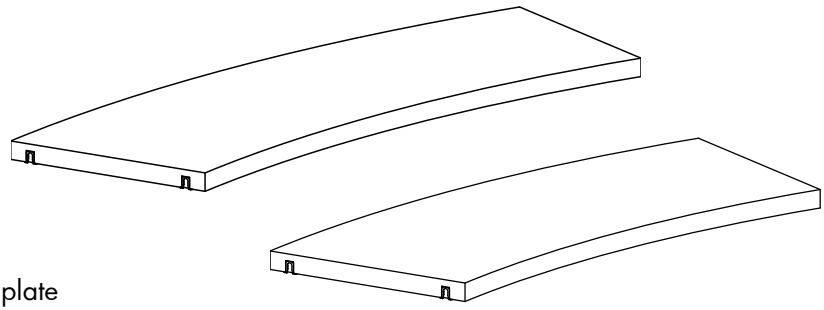

Use with:
- WT7 - 26°/18° wooden top shelf
- WO5 - 26°/18° wooden overlaying top plate

Note:
- Wooden shelves placed at the bottom, must always be fixed with snapfix and screws.

SHELVES

WB5/WB7 - 26° WOODEN BOTTOM SHELF WITH BACKEDGE - INNER & OUTER

Painted and veneered shelves are FSC-certified.

WB5/WB7 - 26° wooden bottom shelf with steel backedge, snapfix and screws - inner

H47 mm steel backedge. With snapfix and screws.	Degree	Shelf depth mm	Item no.	Melamine S14687	Painted S14675	Veneer S14676
	26	300	S146xx311	-	-	-

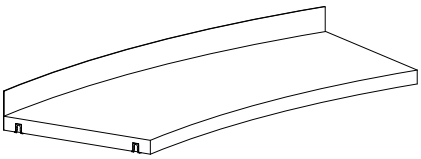

WB5/WB7 - 26° wooden bottom shelf with steel backedge, snapfix and screws - outer

H47 mm steel backedge. With snapfix and screws.	Degree	Shelf depth mm	Item no.	Melamine S14687	Painted S14675	Veneer S14676
	26	300	S146xx312	-	-	-

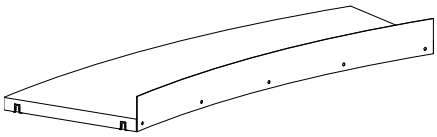

WB6/WB8 - 26° WOODEN BOTTOM SHELF - INNER & OUTER

Painted and veneered shelves are FSC-certified.

WB6/WB8 - 26° wooden bottom shelf without backedge, with snapfix and screws - inner

With snapfix and screws.

Degree	Shelf depth mm	Item no.	Melamine S14689	Painted S14679	Veneer S14680
26	300	S146xx311	-	-	-

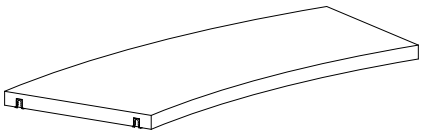

WB6/WB8 - 26° wooden bottom shelf without backedge, with snapfix and screws - outer

With snapfix and screws.

Degree	Shelf depth mm	Item no.	Melamine S14689	Painted S14679	Veneer S14680
26	300	S146xx312	-	-	-

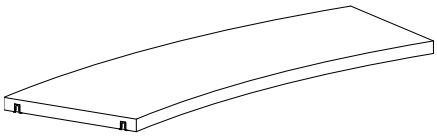

SHELVES

WB5/WB7 - 18° WOODEN BOTTOM SHELF WITH BACKEDGE - INNER & OUTER

Painted and veneered shelves are FSC-certified.

WB5/WB7 - 18° wooden bottom shelf with steel backedge, snapfix and screws - inner

H47 mm steel backedge. With snapfix and screws.	Degree	Shelf depth mm	Item no.	Melamine S14688	Painted S14677	Veneer S14678
	18	300	S146xx311	-	-	-

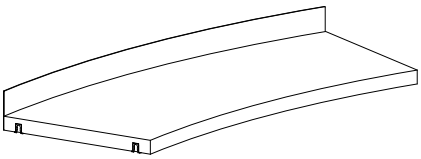

WB5/WB7 - 18° wooden bottom shelf with steel backedge, snapfix and screws - outer

H47 mm steel backedge. With snapfix and screws.	Degree	Shelf depth mm	Item no.	Melamine S14688	Painted S14677	Veneer S14678
	18	300	S146xx312	-	-	-

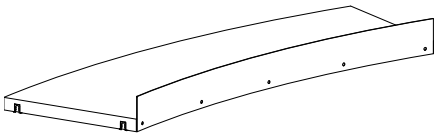

Painted and veneered shelves are FSC-certified.

WB6/WB8 - 18° wooden bottom shelf without backedge, with snapfix and screws - inner

With snapfix and screws.

Degree	Shelf depth mm	Item no.	Melamine S14691	Painted S14683	Veneer S14684
18	300	S146xx311	-	-	-

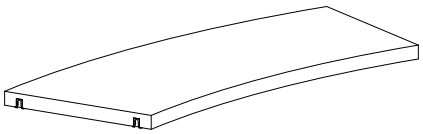

WB6/WB8 - 18° wooden bottom shelf without backedge, with snapfix and screws - outer

With snapfix and screws.

Degree	Shelf depth mm	Item no.	Melamine S14691	Painted S14683	Veneer S14684
18	300	S146xx312	-	-	-

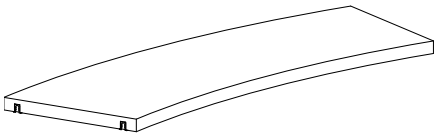

CASTORS

ROUND CASTOR FRAME & CASTOR PLATE

CASTORS

26°/18° CASTOR FRAME & CASTORS

We recommend having a maximum of 3 adjoining bays mounted on castors.

26°/18° castor frame set with visible castors

A set of 2 frames and 4 Ø75 mm castors. To be used with double-sided panels WP1, WP2, WP3, WP4 and back panels WPB1/WBP2. Max. height 1520 mm.

Degree	x castors with brake	Item no.
26	0	S149010
26	2	S149011
18	0	S149020
18	2	S149021

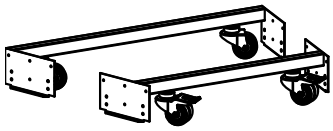

Castors for visible 26°/18° castor frame set

Spare part. H112 mm, Ø75 mm. Max 90 kg. per castor.

Type	Item no.
Without brake	S019050
With brake	S019051

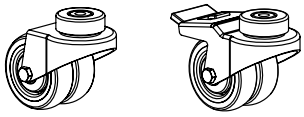

26°/18° castor frame set with hidden castors and steel plinth

A set of 2 frames, 4 x Ø35 mm castors without brakes and 2 steel plinths. To be used with double-sided panels WP1, WP2, WP3, WP4 and back panels WPB1/WBP2. Max. height 1520 mm.

Degree	Item no.
26	S149050
18	S149060

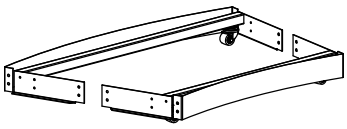

Castors for hidden 26°/18° castor frame set

H50 mm, Ø35 mm.
Spare part. Max. 100 kg per castor.

Type	Item no.
Without brake	S019040

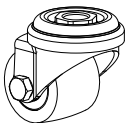

CASTORS

26°/18° CASTOR PLATES

Painted and veneered castor plates are FSC-certified.

Double-sided 26° wooden castor plate

With 4/6/8 Ø80 mm castors, 2 of which are with brakes. To be used with double-sided panels WP5/WP7 for castor plate along with steel back panel SPB7/8 or steel back frame. Max. height 1520 mm.

Degree	Depth mm	No of bays	Item no.	Melamine S14913	Painted S14914	Veneer S14915
26	300	1	S149xx321	-	-	-
26	300	2	S149xx322	-	-	-
26	300	3	S149xx323	-	-	-

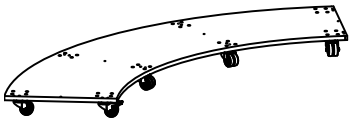

Double-sided 18° wooden castor plate

With 4/6/8 Ø80 mm castors, 2 of which are with brakes. To be used with double-sided panels WP5/WP7 for castor plate along with steel back panel SPB7/8 or steel back frame. Max. height 1520 mm.

Degree	Depth mm	No of bays	Item no.	Melamine S14919	Painted S14920	Veneer S14921
18	300	1	S149xx321	-	-	-
18	300	2	S149xx322	-	-	-
18	300	3	S149xx323	-	-	-

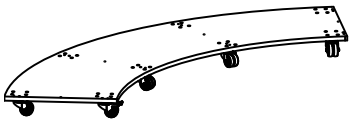

Castors for round castor plate

Spare part. H102 mm, Ø80 mm. Max 200 kg. per castor.

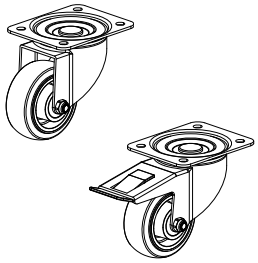

Type	Item no.
Without brake	S019060
With brake	S019061

Painted and veneered plinths are FSC-certified.

Round steel plinth

Incl. screws. H71 mm. Cannot be used with castors.

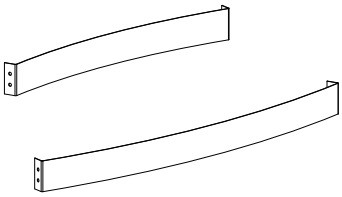

Degree	Curve	Item no.
26	Inner	S147811Z1
26	Outer	S147811Z2
18	Inner	S147821Z1
18	Outer	S147821Z2

WOODEN PANELS

DOUBLE-SIDED - WITH ADJUSTABLE FEET - FOR WOODEN TOP SHELF

Painted and veneered panels are FSC-certified.

WP1 - double-sided outer end panel with adjustable feet - for WT5/WT7

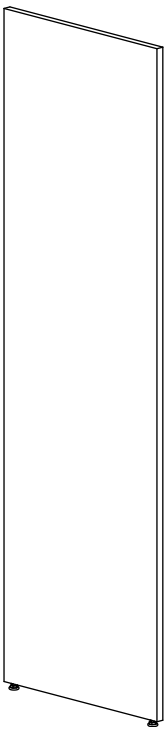

Height mm	Shelf depth mm	Item no.	Melamine S14155	Painted S14156	Veneer S14157
720	300	S141xx1324	-	-	-
920	300	S141xx2324	-	-	-
1220	300	S141xx3324	-	-	-
1520	300	S141xx4324	-	-	-
1820	300	S141xx5324	-	-	-
2120	300	S141xx6324	-	-	-

WP1 - double-sided intermediate panel with adjustable feet - for WT5/WT7

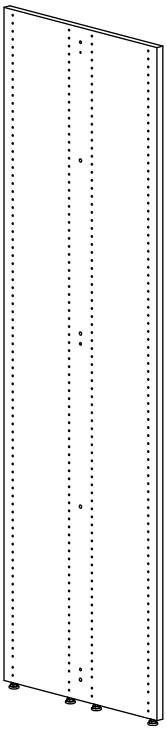

Height mm	Shelf depth mm	Item no.	Melamine S14155	Painted S14156	Veneer S14157
720	300	S141xx1323	-	-	-
920	300	S141xx2323	-	-	-
1220	300	S141xx3323	-	-	-
1520	300	S141xx4323	-	-	-
1820	300	S141xx5323	-	-	-
2120	300	S141xx6323	-	-	-

WOODEN PANELS

DOUBLE-SIDED - WITH ADJUSTABLE FEET - FOR WOODEN TOP SHELF

Painted and veneered panels are FSC-certified.

WP2 - double-sided slat outer end panel with milled slat - with adjustable feet - for WT5/WT7

H1520 has 2 slats, H1820 and 2120 has 3 slats.

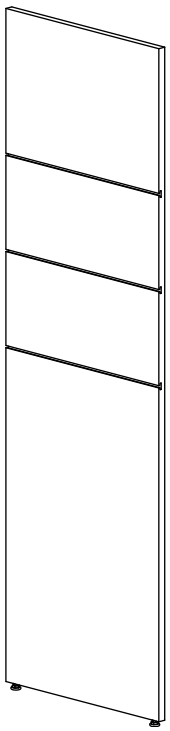

Height mm	Shelf depth mm	Item no.	Painted S14210	Veneer S14211
1520	300	S142xx4324	-	-
1820	300	S142xx5324	-	-
2120	300	S142xx6324	-	-

WOODEN PANELS

DOUBLE-SIDED - WITH ADJUSTABLE FEET & OVERLAYING TOP PLATE

Painted and veneered panels are FSC-certified.

WP3 - double-sided outer end panel with adjustable feet - for WO5

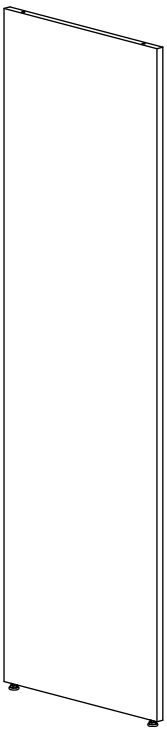

Height mm	Shelf depth mm	Item no.	Melamine S14161	Painted S14162	Veneer S14163
720	300	S141xx1324	-	-	-
920	300	S141xx2324	-	-	-
1220	300	S141xx3324	-	-	-
1520	300	S141xx4324	-	-	-
1820	300	S141xx5324	-	-	-
2120	300	S141xx6324	-	-	-

WP3 - double-sided intermediate panel with adjustable feet - for WO5

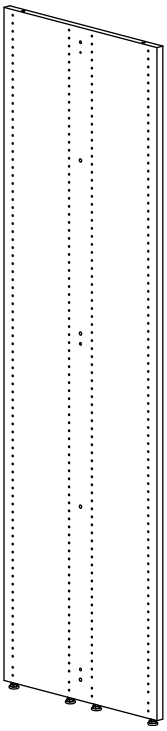

Height mm	Shelf depth mm	Item no.	Melamine S14161	Painted S14162	Veneer S14163
720	300	S141xx1323	-	-	-
920	300	S141xx2323	-	-	-
1220	300	S141xx3323	-	-	-
1520	300	S141xx4323	-	-	-
1820	300	S141xx5323	-	-	-
2120	300	S141xx6323	-	-	-

WOODEN PANELS

DOUBLE-SIDED - WITH ADJUSTABLE FEET & OVERLAYING TOP PLATE

Painted and veneered panels are FSC-certified.

WP4 - double-sided slat outer end panel with milled slat and adjustable feet - for WO5

H1520 has 2 slats, H1820 and 2120 has 3 slats.

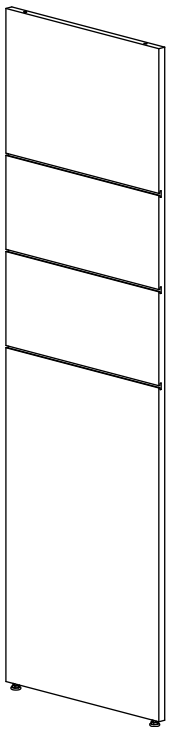

Height mm	Shelf depth mm	Item no.	Painted S14212	Veneer S14213
1520	300	S142xx4324	-	-
1820	300	S142xx5324	-	-
2120	300	S142xx6324	-	-

WOODEN PANELS

DOUBLE-SIDED - FOR CASTOR PLATE & WOODEN TOP SHELF

Painted and veneered panels are FSC-certified.

WP5 - double-sided outer end panel for castor plate - for WT5/WT7

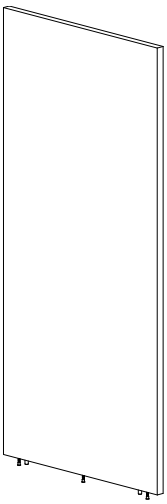

Height mm	Shelf depth mm	Item no.	Melamine S14167	Painted S14168	Veneer S14169
720	300	S141xx1324	-	-	-
920	300	S141xx2324	-	-	-
1220	300	S141xx3324	-	-	-
1520	300	S141xx4324	-	-	-

WP5 - double-sided intermediate panel for castor plate - for WT5/WT7

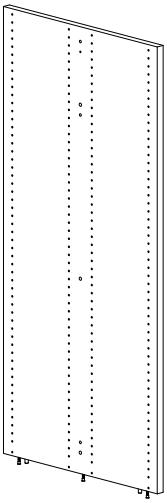

Height mm	Shelf depth mm	Item no.	Melamine S14167	Painted S14168	Veneer S14169
720	300	S141xx1323	-	-	-
920	300	S141xx2323	-	-	-
1220	300	S141xx3323	-	-	-
1520	300	S141xx4323	-	-	-

WOODEN PANELS

DOUBLE-SIDED - FOR CASTOR PLATE & TOP SHELF

Painted and veneered panels are FSC-certified.

WP6 - double-sided slat outer end panel with milled slats - for castor plate - for WT5/WT7

H1520 has 2 slats.

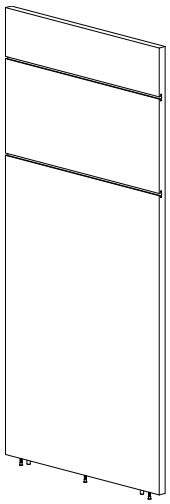

Height mm	Shelf depth mm	Item no.	Painted S14214	Veneer S14215
1520	300	S142xx4324	-	-

WOODEN PANELS

DOUBLE-SIDED - FOR CASTOR PLATE & OVERLAYING TOP PLATE

Painted and veneered panels are FSC-certified.

WP7 - double-sided outer end panel for castor plate - for WO5

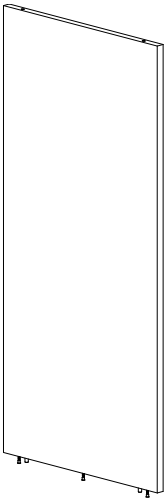

Height mm	Shelf depth mm	Item no.	Melamine S14173	Painted S14174	Veneer S14175
720	300	S141xx1324	-	-	-
920	300	S141xx2324	-	-	-
1220	300	S141xx3324	-	-	-
1520	300	S141xx4324	-	-	-

WP7 - double-sided intermediate panel for castor plate - for WO5

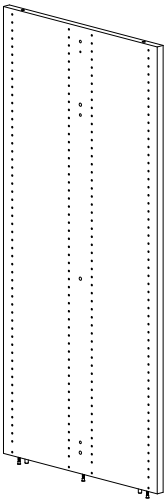

Height mm	Shelf depth mm	Item no.	Melamine S14173	Painted S14174	Veneer S14175
720	300	S141xx1323	-	-	-
920	300	S141xx2323	-	-	-
1220	300	S141xx3323	-	-	-
1520	300	S141xx4323	-	-	-

WOODEN PANELS

DOUBLE-SIDED - FOR CASTOR PLATE & OVERLAYING TOP PLATE

Painted and veneered panels are FSC-certified.

WP8 - double-sided slat outer end panel with milled slat - for castor plate - for WO5

H1520 has 2 slats.

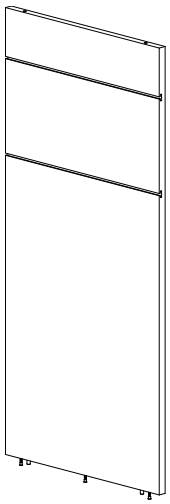

Height mm	Shelf depth mm	Item no.	Painted S14216	Veneer S14217
1520	300	S142xx4324	-	-

WOODEN PANELS

WOODEN END PANEL BAYS

Use the panel to create a display area on Lingo shelving system. The end panel bay is easily retrofitted on existing double-sided shelving systems with adjustable feet/castor frame (replace existing end panel with end panel bay). Painted and veneered panels are FSC-certified.

Wooden end panel bay - for bays with top shelf

Fastening material included.

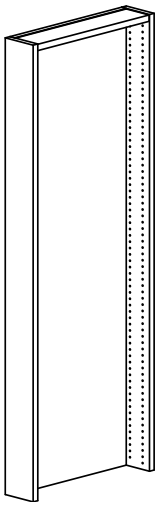

Height mm	Shelf depth mm	Width mm	Item no.	Melamine S14255	Painted S14256	Veneer S14257
720	300	598	S142xx13	-	-	-
920	300	598	S142xx23	-	-	-
1220	300	598	S142xx33	-	-	-
1520	300	598	S142xx43	-	-	-
1820	300	598	S142xx53	-	-	-
2120	300	598	S142xx63	-	-	-

Wooden end panel bay - for bays with overlaying top plate

Fastening material included.

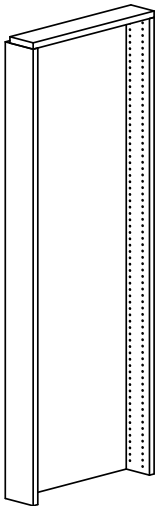

Height mm	Shelf depth mm	Width mm	Item no.	Melamine S14258	Painted S14259	Veneer S14260
720	300	598	S142xx13	-	-	-
920	300	598	S142xx23	-	-	-
1220	300	598	S142xx33	-	-	-
1520	300	598	S142xx43	-	-	-
1820	300	598	S142xx53	-	-	-
2120	300	598	S142xx63	-	-	-

Steel display shelf for wooden end panel bay

H280 mm. Incl. fittings.

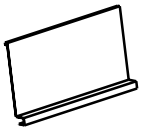

Width mm	Shelf depth mm	Item no.	Steel
598	300	S142613	-

MICHAEL CRICHTON
JAMES PATTERSON
ANNE-GINE GOEMANS
WONDER MOND
ENGMAN SELAKER
ZONDEVAL

BCI

CONNECTION ELEMENTS

ROUND STEEL BACK PANELS - FOR ADJUSTABLE FEET

SBP5 - high steel back panel - for WT5/WT7 (standard depth)/WO5

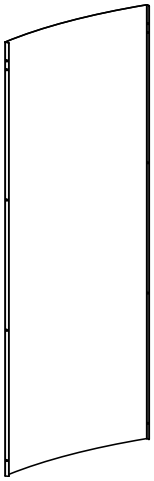

Degree	Height mm	
26	720	S140201
26	920	S140202
26	1220	S140203
26	1520	S140204
26	1820	S140205
26	2120	S140206
18	720	S140221
18	920	S140222
18	1220	S140223
18	1520	S140224
18	1820	S140225
18	2120	S140226

SBP6 - low steel back panel - for WT5/WT7 (double-sided)

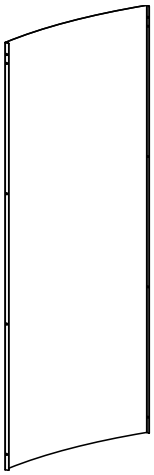

Degree	Height mm	
26	720	S140211
26	920	S140212
26	1220	S140213
26	1520	S140214
26	1820	S140215
26	2120	S140216
18	720	S140231
18	920	S140232
18	1220	S140233
18	1520	S140234
18	1820	S140235
18	2120	S140236

SBP7 - high steel back panel - for WT5/WT7 (standard depth)/WO5

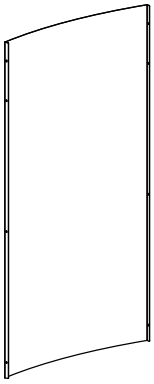

Degree	Height mm	
26	720	S140241
26	920	S140242
26	1220	S140243
26	1520	S140244
18	720	S140261
18	920	S140262
18	1220	S140263
18	1520	S140264

SBP8 - low steel back panel - for WT5/WT7 (double-sided)

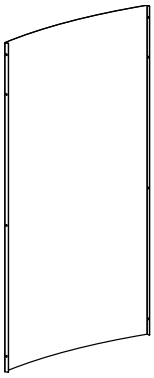

Degree	Height mm	
26	720	S140251
26	920	S140252
26	1220	S140253
26	1520	S140254
18	720	S140271
18	920	S140272
18	1220	S140273
18	1520	S140274

CONNECTION ELEMENTS

ROUND STEEL BACK FRAME

Round steel back frame

With fittings.

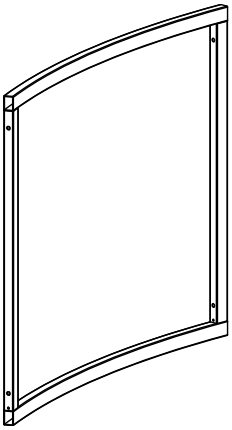

Degree	Bay	Item no.
26	Starter	S14003101
26	Add-on	S14003102
18	Starter	S14004101
18	Add-on	S14004102

THE ART BOOK
Gardens in France
NEW YORK

BELIGGENHED

WE ARE LIBRARY PEOPLE®

DANMARK
Lammhults Biblioteksdesign A/S
Dalbækvej 1
6670 Holsted

bci@bci.dk
www.bci.dk

FRANKRIG
BC Intérieur Sarl
6 allée Kepler
77420 Champs sur Marne

bci@bcinterieur.com
www.bcinterieur.com

BELGIEN
SBNL - Schulz Benelux BV
Appelweg 94 C
3221 Holsbeek

info@sbnl.be
www.sbnl.be

SVERIGE
Lammhults Biblioteksdesign AB
Odlarevägen 16
226 60 Lund

eurobib@eurobib.se
www.eurobib.se

TYSKLAND
Schulz Speyer Bibliothekstechnik AG
Hafenstraße 2
67346 Speyer

sales@schulzspeyer.de
www.schulzspeyer.de

STORBRITANNIEN
thedesignconcept Ltd.
The Old Bakery,
10 Greenless Road
Cambuslang Belgrave Street
Glasow G72 8JJ

info@thedesignconcept.co.uk
www.thedesignconcept.co.uk

NORGE
BS Eurobib AS
Alf Bjerckes Vei 20
0582 Oslo

post@bseurobib.no
www.bseurobib.no